STwrench

The ultimate all purpose wrench.

atlascopco.com

UNLIKE ANY OTHER

Critical fastening duties are among the most essential tightening operations within industry today. So whether you are in the business of assembling cars or trucks, tractors or harvesters, trains or planes, you need to be in control when it comes to production and quality assurance.

That is where the Atlas Copco STwrench comes in. The STwrench provides a whole new approach to manual assembly applications. Naturally, it provides the accuracy, durability and ergonomics that are the hallmarks of the Atlas Copco product range. But the construction of the tool itself is entirely different.

This is far from your standard transducerized hand-held nutrunner. Unlike any other Atlas Copco tool, you can build the STwrench to meet your exact requirements. Due to its truly modular design, you have the freedom to create a tool that suits your applications perfectly. So you get outstanding Atlas Copco performance, but with greater flexibility than ever before.

Use the STwrench for production to get full traceability of the entire tightening operation including torque control, angle control and yield control. Or build your wrench to just tighten your joint with high torque accuracy.

Use the STWrench for quality control to check residual torque, to perform joint analysis, including joint behaviour and stiffness, to set the correct tightening parameters for production and to test the reproducibility of joint stiffness on the benches.

Build your own STwrench and create the ultimate wrench for your specific requirements.

Residual Torque/Angle Algorithm

The STwrench implements a patented residual torque/angle measurement algorithm to measure the torque left on the joints by the tools in production. The STwrench residual torque/angle algorithm makes the residual torque check operator independent.

Furthermore, as the residual point is detected in real time, buzzer, LEDs and vibration alert the operator to stop, avoiding overtorqueing.

Features

- **A** Interchangeable end fittings with patented recognition technology for PSET selection. Full traceability of various applications.
- **B** Optional advanced electronic gyroscope for precise angle measurement.
- **C** Low clearance compact head to get better accessibility and stability of operation.
- **D** Bright LED headlight in front of the smartHEAD to illuminate dark spaces.
- **E** The communication interfaces are USB or Wi-Fi thanks to the radio module. It is also possible to have communication with Power Focus via Wi-Fi or Bluetooth. Barcode module can be added to improve traceability and automatically start the tests.
- **F** Easy-to-read display that can be read at angles of up to 180°.
- **G** Four signal lights for improved operator feedback visible at 360°. Three special LED signals guide the operator for accurate tightening and measuring control.
- **H** Ergonomic vibrating handle to ensure precise use.

BUILD TO FIT

Deciding on the degree of control and connectivity is the next step in creating your STwrench system. Establish what is right for you. Critical fastening duties are demanding, Atlas Copco believes in keeping both control and connectivity simple.

Be in control. The STwrench controller puts you in charge. Menus, parameters and alarms are more manageable, with easy-to-use, text based software. Simply use the five navigation buttons for any tightening activity. Built-in LED signals immediately alert you to deviations from the preset program.

Decrease downtime. Get fast access to the programmed data you need with Atlas Copco's patented Rapid Backup Unit (RBU). The RBU transfers critical data to the hardware unit and serves as back-up for programming and configuration. If you need to change hardware, just connect the RBU on to the new hardware, switch on the unit and you are ready. All programming and network configurations are transferred in seconds.

Accessorize. Add the right accessories to your STwrench controller. Choose the wireless module to support wireless transmission of critical data. Add the barcode reader to easily scan barcode labels on assembly components for ease of traceability. Or select the correct PSet or Job. Manage up to four levels of barcodes for better error proofing.

Get connected. It's easy to connect your STwrench to the control systems you have in place. Standard fieldbus I/O, TCP/IP or Ethernet connectivity lets you decide between wired or wireless communications. Communications with ToolsNet, Torque Supervisor and Power Focus are easy with the wide variety of formats.

Program and customize. Use ToolsTalk BLM to program the STwrench. You can export the latest 5000 results into an excel file or save the latest 10 traces. View and zoom the tightening trace for accurate analysis.

THE SMARTHEAD

The SmartHEAD really lives up to its name. The smartHEAD has a built-in memory chip to store calibration values that are automatically recognized by the STwrench controller. They come in 21 different versions from 15 Nm up to 1000 Nm, with or without angle reading. The smartHEAD is fast to exchange, this makes STwrench easy to upgrade and Service.

The transducer and the gyroscope are located in the front part of the smartHEAD to be less dependent from bending effects, a coefficient is stored after calibration to compensate any remaining bending effect. The smartHEAD has a patented mechanism to recognize the end fitting tool connected, this allows to automatically start the associated program.

Choose your smartHEAD fitting your application, connect it and you are ready to go.

OPTIONS AND ACCESSORIES

Battery

The lithium ion battery provides 16 hours of working time. If wireless communication is used, the working time is 10 hours.

Battery charger

The battery charger fully recharges a STwrench battery in just four hours. The charger can be mounted horizontally on a wall, the battery screws into the charger.

Bar code module

With this module, the STwrench is able to handle four different bar codes that activate or control the process. It also enables traceability. Simply plug in the module to activate the function.

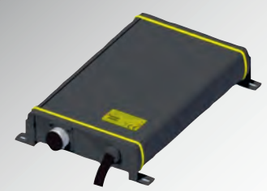

Cable box

Connect the STwrench to the Power Focus using a standard Tensor SL cable. The STwrench cable box supplies power to the wrench and handles the communication between the wrench and the Power Focus.

QATnode

Three different models of QATnodes provide customized solutions to meet individual customer needs. The STwrench Modules can be connected to the QATnodes with WiFi via access point in real time – or via IrDa when not mounted on the cradle.

QATnode P. The QATnode P makes it possible to print out a ticket result on a STAR DP8340 that is a 40 column serial printer. The layout of the ticket is fully configurable via TT BLM.

QATnode I/O. In addition to the QATnode P functionality, there are also 6 digital inputs and 5 digital outputs. Each of these are fully configurable and make it possible to enable or disable the wrench, select a PSet or JOB, as well as send out an OK or NOK.

QATnode T.Using QATnode T functionality, the STwrench can also send data to the ToolsNet server.

IRC Modules. Two different IRC modules with two different wireless technologies.
No extra software is needed. Simply plug in the new module to activate communication to the Power Focus, QATnode or different systems on the internet.

Power Focus 4000 is the control system for the STwrench. The Power Focus 4000 is available in one model with two versions, PF 4000 Compact and PF 4000 Graph.

Power Focus 4000 or Focus 4000 is used in combination with the STwrench for line integration via digital I/O or fieldBus. This makes it possible to use Atlas Copco Quality Integration Fastening (QIF) accessories, such as stack light, operator panel, mini display and other Atlas Copco standard QIF components.

For all types of applications

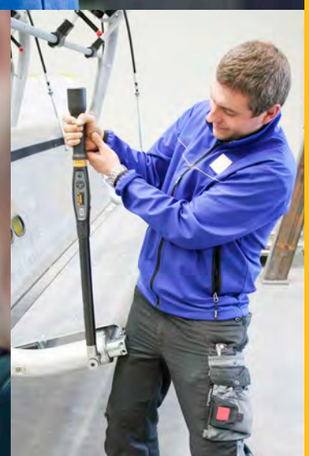

WHY YOU SHOULD INVEST

There are many reasons to invest in the STwrench. It could be the ergonomic lightweight design. Maybe you feel that its modularity guarantees that you'll get just the right tool for your job – at the right cost. Maybe The agility and accessibility is what is appealing to you. Any way, this tool will easily find its place in your applications and have them run fast, easy and correct.

Product Benefits:

- Lightweight and ergonomic all purpose manual torque wrench.
- Tailored to your exact requirements.
- Modular and cost-effective – only invest in what you need.
- Easy to integrate, use, service and upgrade.
- Reliable, always up-to-date programming strategies and backup.
- Smart accessories for error proofing and traceability, including wireless module, barcode reader, and Power Focus or Focus Interface Module.

Benefits in quality assurance:

- Joint analysis and quality control.
- Quick and easy residual torque checks during production when traceability and error proofing are required.
- Joint analysis when advanced functionality such as trace export, zoom and yield point detection are required.
- Accurate residual torque checks communication using a reliable paperless interface to the quality system.

Benefits in production:

- Difficult access or limited space applications.
- For immediate temporary backup on the line and assembly of special production.
- Repair stations that need greater flexibility and a wider torque range.
- Accurate and affordable tube-nut tightening.
- When you need the same error proofing, traceability and quality as an electric tool.

Functionality overview

Functionality overview	Quality		Production	
	smartHEAD	smartHEAD A	smartHEAD	smartHEAD A
Controller				
360° LED lights on board for operator feed back	x	x	x	x
Keyboard	x	x	x	x
Graphic Display	x	x	x	x
USB mini to connect ToolsTalk BLM	x	x	x	x
Infrared communication	x	x	x	x
Buzzer	x	x	x	x
Rapid Back Up Unit (RBU)	x	x	x	x
Vibration	x	x	x	x
Shock detector	x	x	x	x
smartHEAD				
Interchangeable head – Tag recognition	x	x	x	x
Ligth in front of smartHEAD	x	x	x	x
Gyroscope for angle measurement		x		x
Length-independent torque transducer	x	x	x	x
Free mode - programs				
Track torque	x	x	x	x
Peak torque	x	x	x	x
Residual check torque/time	x	x	x	x
Residual check torque/angle		x		x
Tightening torque with angle monitoring		x		x
Quality audit				
Peak	x	x	x	x
Residual check torque/time	x	x	x	x
Residual check torque/angle		x		x
Loosen and retighten		x		x
Loosen		x		x
Joint Analysis				
Torque/angle graphing		x		x
Yield point detection		x		x
Tightening				
Torque with time monitoring			x	x
Torque with angle monitoring				x
Torque plus angle				x
Yield				x
Yield plus angle				x
PSET				
Number of Psets	200	200	200	200
Batch count	x	x	x	x
Number of job	100	100	100	100
Number of multistage	200	200	200	200
CW/CCW operation	x	x	x	x

Functionality overview	Quality		Production	
	smartHEAD	smartHEAD A	smartHEAD	smartHEAD A
Bending correction		x		x
Extension torque correction	x	x	x	x
Extension angle correction		x		x
General				
Transducer torque traceability	x	x	x	x
Result data storage	5000	5000	5000	5000
Trace storage	10	10	10	10
SPC	x	x	x	x
Multi units (Nm, Kg/m)	x	x	x	x
Multi language menu	x	x	x	x
Interchangeable head – Tag recognition writing function	x	x	x	x
Connectivity				
PF connectivity for I/O or any type of fieldBus	x	x	x	x
ToolsNet	x	x	x	x
QATnode	x	x	x	x
Optional				
Barcode reader	x	x	x	x
IRC-W	x	x	x	x
IRC-B for Power Focus connectivity	x	x	x	x
Cable to Power Focus	x	x	x	x
ToolsTalk BLM				
USB connection	x	x	x	x
Off-line programming	x	x	x	x
Tightening Database to PC (Excel)	x	x	x	x
View trace	x	x	x	x
Export trace in several formats	x	x	x	x
Overlay traces	x	x	x	x
Trace zoom	x	x	x	x
Statictical analysis	x	x	x	x
Bar code reader configuration	x	x	x	x
Accessories				
Battery	x	x	x	x
Battery charger	x	x	x	x

RBU Rapid Backup unit	Ordering No.
STwrench RBU Quality	8059 0930 90
STwrench RBU Production	8059 0930 91
STwrench RBU Quality API	8059 0930 93
STwrench RBU Production API	8059 0930 92
Battery	
STwrench battery	8059 0930 86
STwrench battery BI	8059 0930 85
STwrench battery HD	8059 0930 83

Accessories	Ordering No.
IRC-B Module	8059 0920 10
IRC-W Module	8059 0920 15
Bar Code	8059 0920 12
Battery charger	8059 0930 88
Battery charger adapter BI	8059 0930 89
Cable box	8059 0920 24
QATnode P	8059 0920 25
QATnode I/O	8059 0920 26
QATnode T	8059 0920 27
Tool holder	8059 0930 70
Controller rubber protection	8059 0930 72
Standard Battery rubber protection	8059 0930 73
30/80 Nm smartHEAD rubber protection	8059 0930 74
150 Nm smartHEAD rubber protection	8059 0930 75
250 Nm smartHEAD rubber protection	8059 0930 76
400 Nm smartHEAD rubber protection	8059 0930 79

Model	Capacity Nm	Capacity ft.lb	Drive mm	Weight kg	Weight lb	Length mm	Ordering No.
Controller							
STwrench Controller				0.48	1.08	313	8059 0930 00
STwrench Controller BI				0.46	1.01	333	8059 0930 01
STwrench Controller HD				1.0	2.11	313	8059 0930 02
smartHEAD only Torque *							
smartHEAD 30	30	23	9x12	0.20	0.44	167.5	8059 0920 30
smartHEAD 80	80	59	9x12	0.22	0.48	167.5	8059 0920 42
smartHEAD 150	150	111	14x18	0.55	1.21	271.0	8059 0920 48
smartHEAD 250	250	185	14x18	0.78	1.72	417.0	8059 0920 54
smartHEAD 400	400	295	14x18	0.93	2.05	584.0	8059 0920 60
smartHEAD 600	600	443	21x26	1.70	3.75	1048.5	8059 0920 66
smartHEAD 1000	1000	737	28	1.90	4.19	1344.0	8059 0920 80
smartHEAD A Torque + Angle*							
smartHEAD A15	15	11	9x12	0.19	0.42	147.5	8059 0930 24
smartHEAD A30	30	23	9x12	0.19	0.42	147.5	8059 0930 31
smartHEAD A80	80	59	9x12	0.20	0.44	147.5	8059 0930 43
smartHEAD A150	150	111	14x18	0.57	1.25	271.0	8059 0930 48
smartHEAD A250	250	185	14x18	0.80	1.76	417.0	8059 0930 54
smartHEAD A400	400	295	14x18	0.95	2.09	584.0	8059 0930 60
smartHEAD A600	600	443	21x26	1.72	3.79	1048.5	8059 0930 66
smartHEAD A800	160 - 800	118 - 590	21x26	1.70	3.75	1048.5	8059 0988 26
smartHEAD A1000	1000	737	28	1.90	4.19	1344.0	8059 0930 80
smartHEAD A Torque + Angle sq							
smartHEAD Asq15	15	11	9x12	0.19	0.42	147.5	8059 0930 28
smartHEAD Asq30	30	23	9x12	0.19	0.42	147.5	8059 0930 32
smartHEAD Asq80	80	59	9x12	0.44	0.44	147.5	8059 0930 44
smartHEAD Asq150	150	111	14x18	0.55	1.21	271.0	8059 0930 50
smartHEAD Asq250	250	185	14.18	0.78	1.72	417.0	8059 0930 56
smartHEAD Asq400	400	295	14x18	0.93	2.05	584.0	8059 0930 62

*End fitting has to be ordered separately, please see Industrial Power Tools Catalogue 9837 3000 01

Model	Dimensions mm X	Y	Z*	K*	J**	W	Weight g	lb
STwrench 15 Nm	139	280	96	515	407	18.3	1000	2.20
STwrench 30 Nm	139	280	96	515	407	18.3	1030	2.27
STwrench 80 Nm	139	280	96	515	407	18.3	1060	2.34
STwrench 150 Nm	262	280	96	638	537	24.2	1280	2.82
STwrench 250 Nm	408	280	96	784	683	24.2	1510	3.33
STwrench 400 Nm	575	280	96	952	850	24.2	1710	3.77
STwrench 600 Nm	1040	280	96	1416	1353	63	2870	6.33
STwrench 800 Nm	1040	280	96	1416	1353	63	2870	6.33
STwrench 1000 Nm	1270	280	96	1646	1668	148	3720	8.20
STwrench BI 15 Nm	139	280	32	451	407	18.3	800	1.76
STwrench BI 30 Nm	139	280	32	451	407	18.3	830	1.83
STwrench BI 80 Nm	139	280	32	451	407	18.3	860	1.89
STwrench BI 150 Nm	262	280	32	574	537	24.2	1080	2.38
STwrench BI 250 Nm	408	280	32	720	683	24.2	1310	2.89
STwrench BI 400 Nm	576	280	32	887	850	24.2	1510	3.33
STwrench BI 600 Nm	1040	280	32	1352	1353	63	2670	5.89
STwrench BI 800 Nm	1040	280	32	1352	1353	63	2670	5.89
STwrench BI 1000 Nm	1270	280	32	1582	1668	148	3520	7.76
STwrench Heavy Duty 15 Nm ***	139	280	96	515	407	18.3	1500	3.30
STwrench Heavy Duty 30 Nm ***	139	280	96	515	407	18.3	1530	3.37
STwrench Heavy Duty 80 Nm ***	139	280	96	515	407	18.3	1560	3.44
STwrench Heavy Duty 150 Nm ***	262	280	96	638	537	24.2	1780	3.92
STwrench Heavy Duty 250 Nm ***	408	280	96	784	683	24.2	2010	4.43
STwrench Heavy Duty 400 Nm ***	575	280	96	952	850	24.2	2210	4.87
STwrench Heavy Duty 600 Nm ***	1040	280	96	1416	1353	63	3370	7.43
STwrench Heavy Duty 800 Nm ***	1040	280	96	1416	1353	63	3370	7.43
STwrench Heavy Duty 1000 Nm ***	1270	280	96	1646	1668	148	4220	9.30

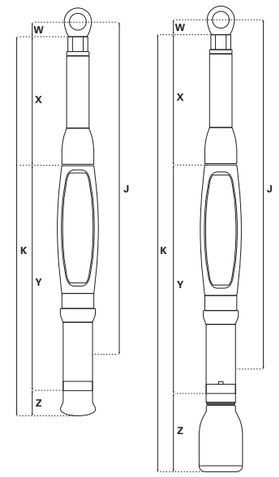

*Dimension Z is 50.5 mm when the STwrench battery short HD is installed (and Dimension K decreases by 45.5 mm). **Dimension J is the standard arm (measured at the center of the end-fitting tool); these data are used to calculate the torque correction coefficient when an extension is used. This dimension is calculated for the standard Atlas Copco end-fitting tools; if a different end-fitting tool is used, this measure must be recalculated.
Refer to the "Appendix A – Calculating Torque and Angle Correction Coefficients" for further details. ***For STwrench Heavy Duty, both the feature "IRDA Port" and "Shock Indicator" are not available.

Standard end fitting tools with TAG

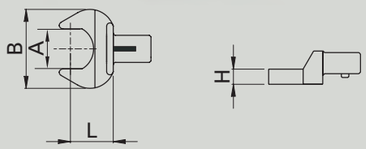

Type	A mm	B mm	H mm	L mm	g	Ordering No.
Open end 9 x 12	7	22	5	17.5	40	4620 0001 00
	8	22	5	17.5	39	4620 0002 00
	9	26	5.5	17.5	38	4620 0003 00
	10	26	5.5	17.5	42	4620 0004 00
	11	26	5.5	17.5	41	4620 0005 00
	12	30	7	17.5	43	4620 0006 00
	13	30	7	17.5	48	4620 0007 00
	14	35	8	17.5	52	4620 0008 00
	15	35	8	17.5	51	4620 0009 00
	16	38	8.5	17.5	58	4620 0010 00
	17	38	8.5	17.5	60	4620 0011 00
	18	42	9	20	71	4620 0012 00
	19	42	9	20	74	4620 0013 00
Open end 4 x 18	13	30	7	25	128	4620 0049 00
	14	35	8	25	129	4620 0050 00
	15	35	8	25	132	4620 0051 00
	16	38	9	25	140	4620 0052 00
	17	38	9	25	136	4620 0053 00
	18	42	10	25	147	4620 0054 00
	19	42	10	25	147	4620 0055 00
	21	50	11	25	171	4620 0056 00
	22	50	11	25	165	4620 0057 00
	24	53	12	25	167	4620 0058 00
	27	60	13	30	219	4620 0059 00
	30	66	14	30	245	4620 0060 00
	32	66	14	32.5	246	4620 0061 00
	34	66	14	32.5	239	4620 0062 00

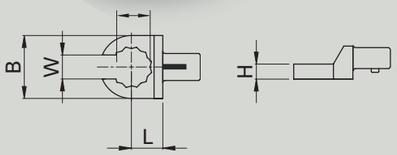

Type	Hex mm	B mm	H mm	W mm	L mm	g	Ordering No.
Flared end 9 x 12	10	22	12	7.1	17.5	57	4620 0028 00
	11	22.5	12	8.6	17.5	55	4620 0029 00
	12	23.5	12	9	17.5	59	4620 0030 00
	13	25.2	12	10	17.5	55	4620 0031 00
	14	27	13	11	17.5	60	4620 0032 00
	16	30	13	13	17.5	65	4620 0033 00
	17	31.5	13	14	17.5	65	4620 0034 00
	18	33	15	14.8	17.5	74	4620 0035 00
	19	34.5	15	15.8	19	80	4620 0036 00
	21	37.5	15	16.2	19	88	4620 0037 00
	22	39	15	17	19	92	4620 0038 00
	24	42	15	18	19	75	4620 0039 00

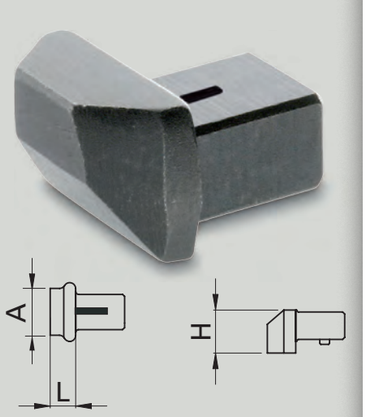

Type	A mm	H mm	L mm	g mm	Ordering No.
Blank end 9 x12 for making up specials	8 x 14	14.5	8	30	4620 0048 00
Blank end 14 x18	11 x 25	21.5	21	98	4620 0084 00
Blank end 21 x26	13 x 30	30	13	220	4620 0085 00

Standard end fitting tools with TAG

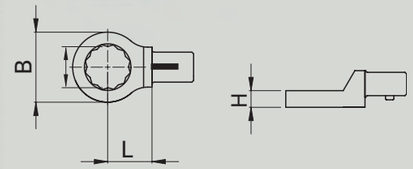

Type	Hex mm	B mm	H mm	L mm	g	Ordering No.
Ring end 9 x 12	7	13	8	17.5	37	4620 0014 00
	8	14.2	8	17.5	40	4620 0015 00
	10	17.2	9	17.5	44	4620 0016 00
	11	18.5	9	17.5	41	4620 0017 00
	12	20	12	17.5	49	4620 0018 00
	13	21.5	12	17.5	56	4620 0019 00
	14	23	12	17.5	52	4620 0020 00
	15	24.2	12	17.5	52	4620 0021 00
	16	25.7	13	17.5	54	4620 0022 00
	17	27.2	13	17.5	59	4620 0023 00
	18	28.5	13	17.5	56	4620 0024 00
	19	30.3	13	17.5	65	4620 0025 00
	21	33	15	17.5	71	4620 0026 00
	22	34.5	15	17.5	74	4620 0027 00
Ring end 14 x 18	13	21.5	11	25	127	4620 0063 00
	14	23	11	25	123	4620 0064 00
	15	24.2	11	25	128	4620 0065 00
	16	25.7	12	25	133	4620 0066 00
	17	27.2	12	25	135	4620 0067 00
	18	28.5	12	25	134	4620 0068 00
	19	30.5	12	25	138	4620 0069 00
	21	33	15	25	144	4620 0070 00
	22	34.5	15	25	145	4620 0071 00
	24	37.5	15	25	153	4620 0072 00
	27	41.5	17	25	162	4620 0073 00
	30	45	19	25	182	4620 0074 00
	32	47.5	19	25	181	4620 0075 00
	34	50.5	19	28	210	4620 0076 00
	36	53	19	28	203	4620 0077 00
	41	59	20	30	240	4620 0078 00

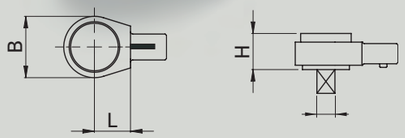

Type	Hex in	B mm	H mm	L mm	g	Ordering No.
Reversible ratchet 9 x 12	1/4	22	14.5	17.5	62	4620 0043 00
	3/8	33	24	17.5	136	4620 0044 00
	1/2	33	28.3	17.5	147	4620 0045 00
Reversible ratchet 14 x 18	1/2	43	26.2	25	302	4620 0081 00*
	3/4	50	30.7	25	467	4620 0082 00
Reversible ratchet 21 x 26	3/4	69	30	62.5	1350	4620 0086 00

The TAG placed on the ratchet defines the Pset. **NOTE:** Since several sockets could be used, it is recommended to hold the socket in such a way that it is not possible to remove it (e.g. using a pin).

* The maximum torque which can be applied with 4620 0081 00 is 300 Nm.

Standard end fitting tools without TAG

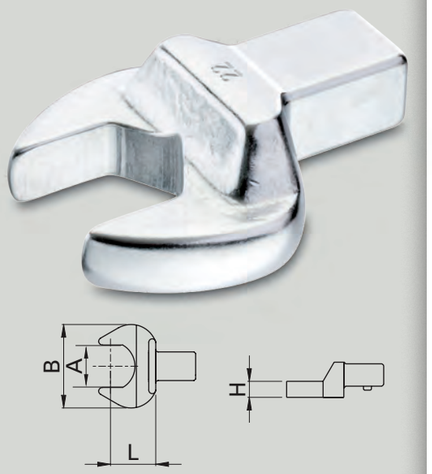

Type	A mm	B mm	H mm	L mm	g	Ordering No.
Open end 9 x 12	7	22	5	17.5	40	8059 0975 00
	8	22	5	17.5	39	8059 0975 01
	9	26	5.5	17.5	38	8059 0975 02
	10	26	5.5	17.5	42	8059 0975 03
	11	26	5.5	17.5	41	8059 0975 04
	12	30	7	17.5	43	8059 0975 05
	13	30	7	17.5	48	8059 0975 06
	14	35	8	17.5	52	8059 0975 07
	15	35	8	17.5	51	8059 0975 08
	16	38	8.5	17.5	58	8059 0975 09
	17	38	8.5	17.5	60	8059 0975 10
	18	42	9	20	71	8059 0975 11
	19	42	9	20	74	8059 0975 12
Open end 14 x 18	13	30	7	25	128	8059 0976 00
	14	35	8	25	129	8059 0976 01
	15	35	8	25	132	8059 0976 02
	16	38	9	25	140	8059 0976 03
	17	38	9	25	136	8059 0976 04
	18	42	10	25	147	8059 0976 05
	19	42	10	25	147	8059 0976 06
	21	50	11	25	171	8059 0976 07
	22	50	11	25	165	8059 0976 08
	24	53	12	25	167	8059 0976 09
	27	60	13	30	219	8059 0976 10
	30	66	14	30	245	8059 0976 11
	32	66	14	32.5	246	8059 0976 12
	34	66	14	32.5	239	8059 0976 13

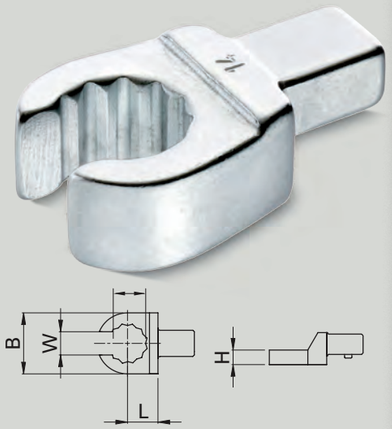

Type	Hex mm	B mm	H mm	W mm	L mm	g	Ordering No.
Flared end 9 x 12	10	22	12	7.1	17.5	57	8059 0975 27
	11	22.5	12	8.6	17.5	55	8059 0975 28
	12	23.5	12	9	17.5	59	8059 0975 29
	13	25.2	12	10	17.5	55	8059 0975 30
	14	27	13	11	17.5	60	8059 0975 31
	16	30	13	13	17.5	65	8059 0975 32
	17	31.5	13	14	17.5	65	8059 0975 33
	18	33	15	14.8	17.5	74	8059 0975 34
	19	34.5	15	15.8	19	80	8059 0975 35
	21	37.5	15	16.2	19	88	8059 0975 36
	22	39	15	17	19	92	8059 0975 37
	24	42	15	18	19	75	8059 0975 38

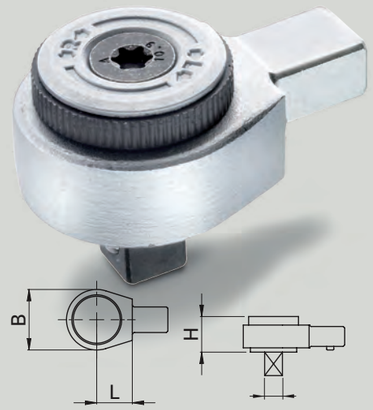

Type	Hex in	B mm	H mm	L mm	g	Ordering No.
Reversible ratchet 9 x 12	1/4	22	14.5	17.5	62	8059 0975 42
	3/8	33	24	17.5	136	8059 0975 43
	1/2	33	28.3	17.5	147	8059 0975 44
Reversible ratchet 14 x 18	1/2	43	26.2	25	302	8059 0976 32*
	3/4	50	30.7	25	467	8059 0976 33
Reversible ratchet 21 x 26	3/4	69	30	62.5	1350	8059 0976 38

* The maximum torque which can be applied with 8059 0976 32 is 300 Nm.

Standard end fitting tools without TAG

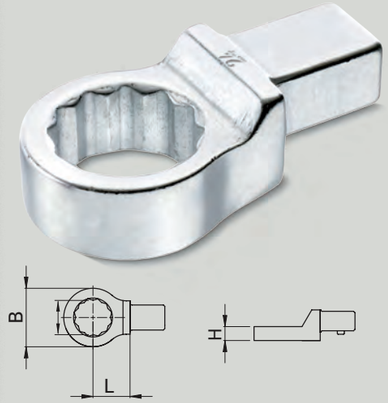

Type	Hex mm	B mm	H mm	L mm	g	Ordering No.
Ring end 9 x 12	7	13	8	17.5	37	8059 0975 13
	8	14.2	8	17.5	40	8059 0975 14
	10	17.2	9	17.5	44	8059 0975 15
	11	18.5	9	17.5	41	8059 0975 16
	12	20	12	17.5	49	8059 0975 17
	13	21.5	12	17.5	56	8059 0975 18
	14	23	12	17.5	52	8059 0975 19
	15	24.2	12	17.5	52	8059 0975 20
	16	25.7	13	17.5	54	8059 0975 21
	17	27.2	13	17.5	59	8059 0975 22
	18	28.5	13	17.5	56	8059 0975 23
	19	30.3	13	17.5	65	8059 0975 24
	21	33	15	17.5	71	8059 0975 25
	22	34.5	15	17.5	74	8059 0975 26
Ring end 14 x 18	13	21.5	11	25	127	8059 0976 14
	14	23	11	25	123	8059 0976 15
	15	24.2	11	25	128	8059 0976 16
	16	25.7	12	25	133	8059 0976 17
	17	27.2	12	25	135	8059 0976 18
	18	28.5	12	25	134	8059 0976 19
	19	30.5	12	25	138	8059 0976 20
	21	33	15	25	144	8059 0976 21
	22	34.5	15	25	145	8059 0976 22
	24	37.5	15	25	153	8059 0976 23
	27	41.5	17	25	162	8059 0976 24
	30	45	19	25	182	8059 0976 25
	32	47.5	19	25	181	8059 0976 26
	34	50.5	19	28	210	8059 0976 27
	36	53	19	28	203	8059 0976 28
	41	59	20	30	240	8059 0976 29

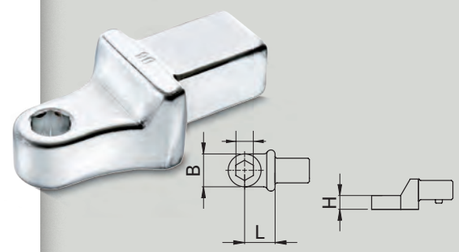

Type	Hex in	B mm	H mm	L mm	g	Ordering No.
Bits holder 9 x 12	1/4	14	10	17.5	50	8059 0975 45
	5/16	16	12.5	17.5	47	8059 0975 46
Bits holder 14 x 18	5/16	16	12.5	25	112	8059 0976 34

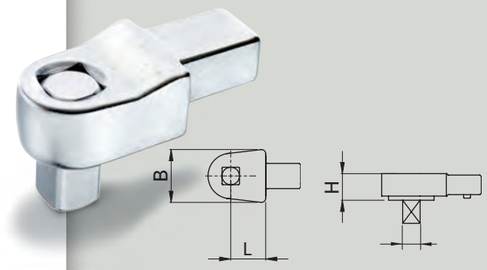

Type	Hex in	B mm	H mm	L mm	g	Ordering No.
Fixed square 9 x 12	1/4	22	14	17.5	71	8059 0975 39
	3/8	22	14	17.5	76	8059 0975 40
	1/2	22	14	17.5	82	8059 0975 41
Fixed square 14 x 18	1/2	30	18	25	203	8059 0976 30
	3/4	40	25	25	396	8059 0976 31

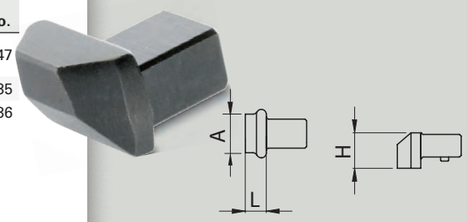

Type	A mm	H mm	L mm	g mm	Ordering No.
Blank end 9 x 12 for making up specials	8 x 14	14.5	8	30	8059 0975 47
Blank end 14 x 18	11 x 25	21.5	21	98	8059 0976 35
Blank end 21 x 26	13 x 30	30	13	220	8059 0976 36

ECO DESIGN STwrench

Prohibited and Restricted lists

Compliance with Atlas Copco Prohibited and Restricted lists ensure use of safe chemicals and materials.

- ☑ RoHS II directive (2011/65/EU)
- ☑ REACH (EC No 1907/2006)

Recycling information

Information regarding dismantling and recycling is available in the Product Information.

- ☑ WEEE (2012/19/EU)

Service instructions

Spare parts and Service Instructions are provided for the customer to ensure long product life.

Safe chemicals

Safety Data Sheets are available for all chemicals.

Triple certification

Atlas Copco Industrial Technique and Assembly Solutions are certified against ISO 14001, ISO9001 and OHSAS18001.

Serviceability

The modular design allows easy access to components and battery which enables replacement of parts and facilitates service of the STwrench.

Light design of smartHEAD

STwrench smartHEAD is made in carbon fiber to reduce weight and maintain the same level of robustness.

Modularity

STwrench has a modular design with several advantages from an environmental point of view:

- No unnecessary module has to be bought and thus produced.
- The easy upgrading of the STwrench with new features for new applications ensures long product life and reuse of components.

Commonality

STwrench has been designed so that spare parts and modules are in common with other products. Such commonality helps reduce the number of items to be stocked and transported.

9833 1909 01 2015:1 – EN © Atlas Copco BLM, Milan, Italy. Production: Atlas Copco BLM. April 2020.

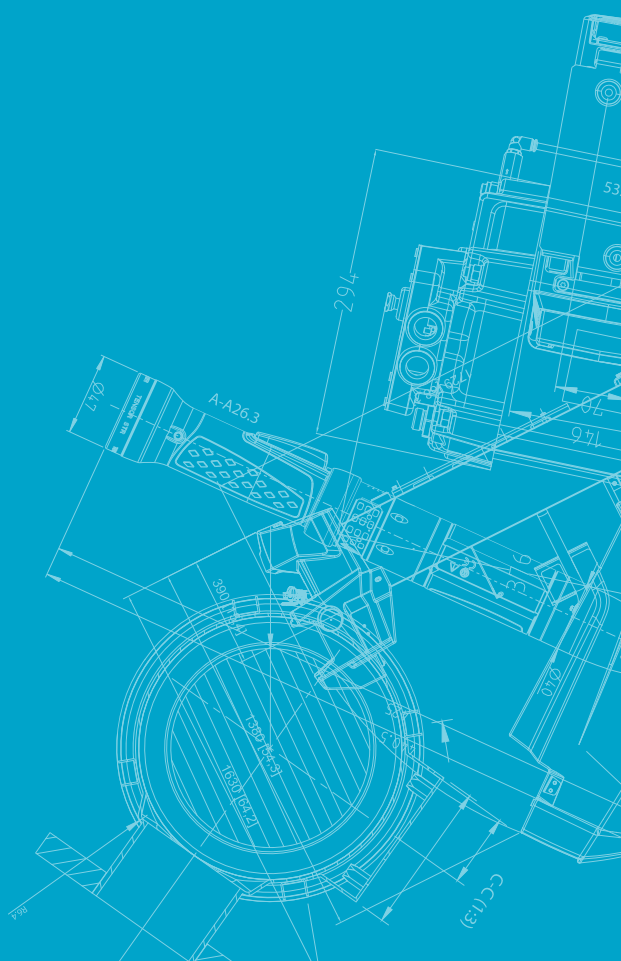

Atlas Copco BLM

Via Guglielmo Pepe, 11
Paderno Dugnano (MI) - Italy

atlascopco.com