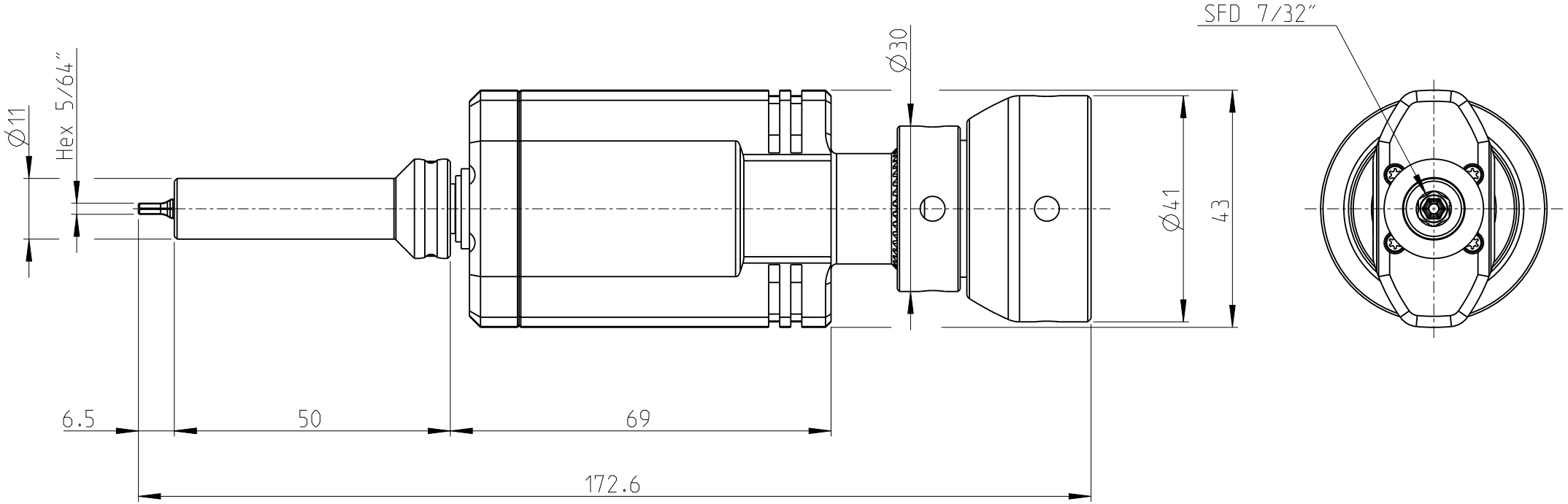

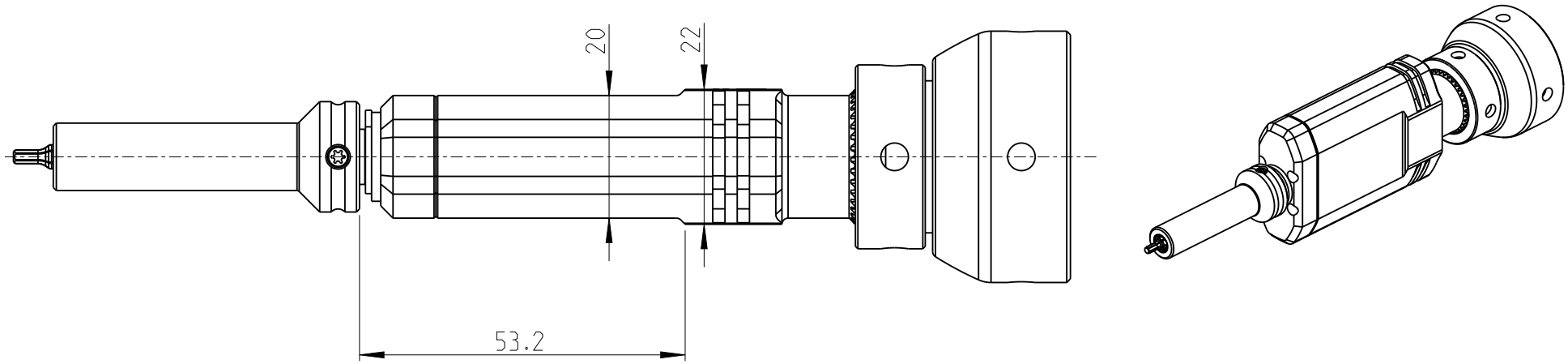

SALTUS

Date	Scale	Ordering No.	Model
2022-07-06	1.000	3513 0012 80	F-HIT12-0-50-06H