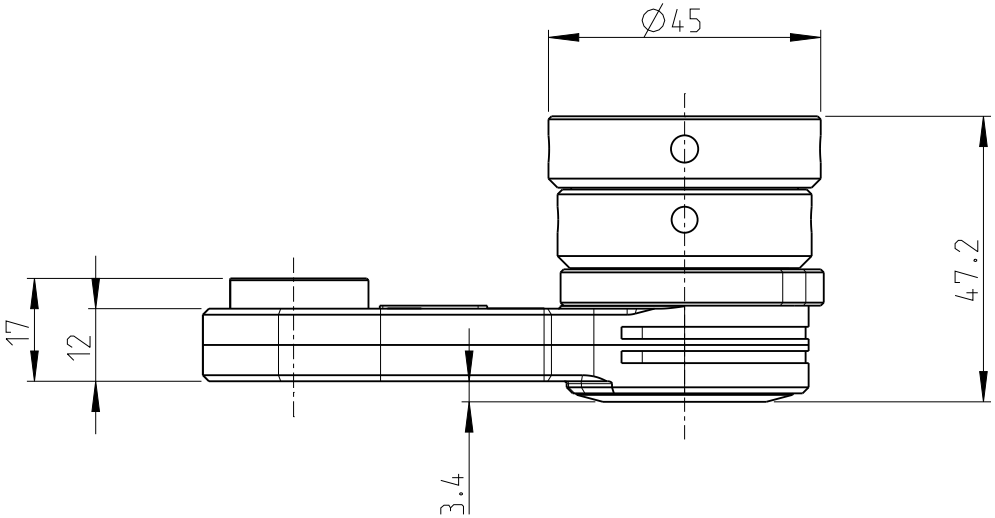

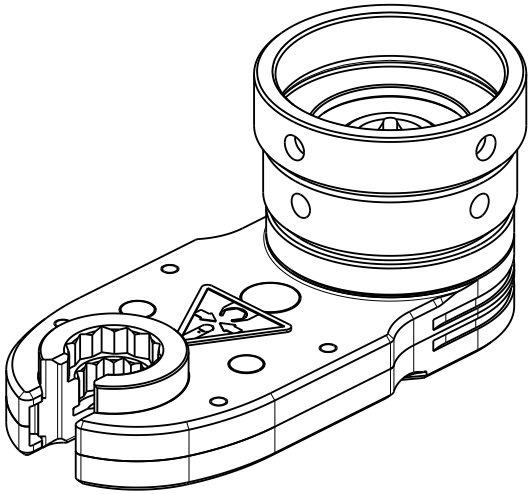

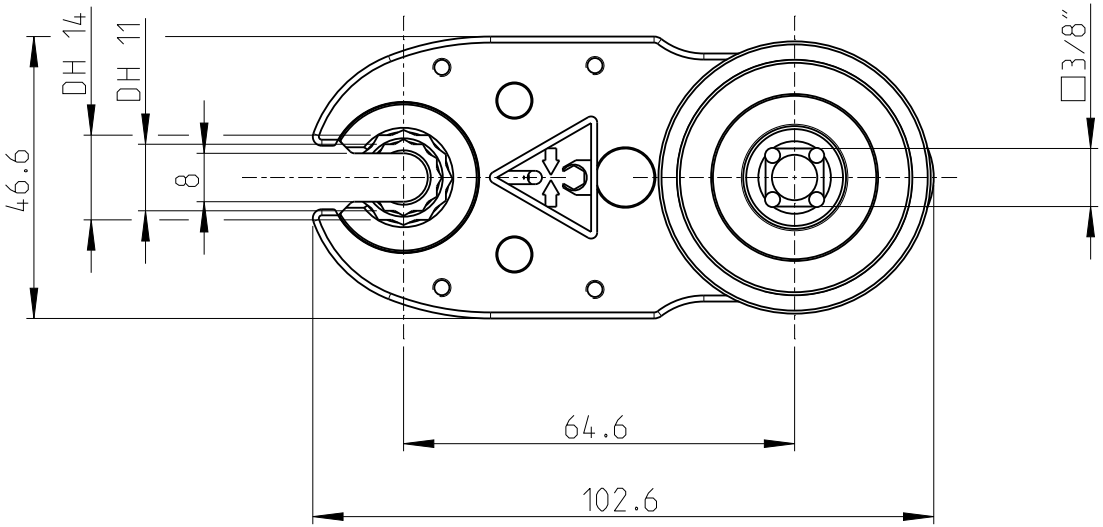

SALTUS

Date	Scale	Ordering No.	Model
2024-04-12	0.800	3513 0021 42	F-00T50-3-5U-14