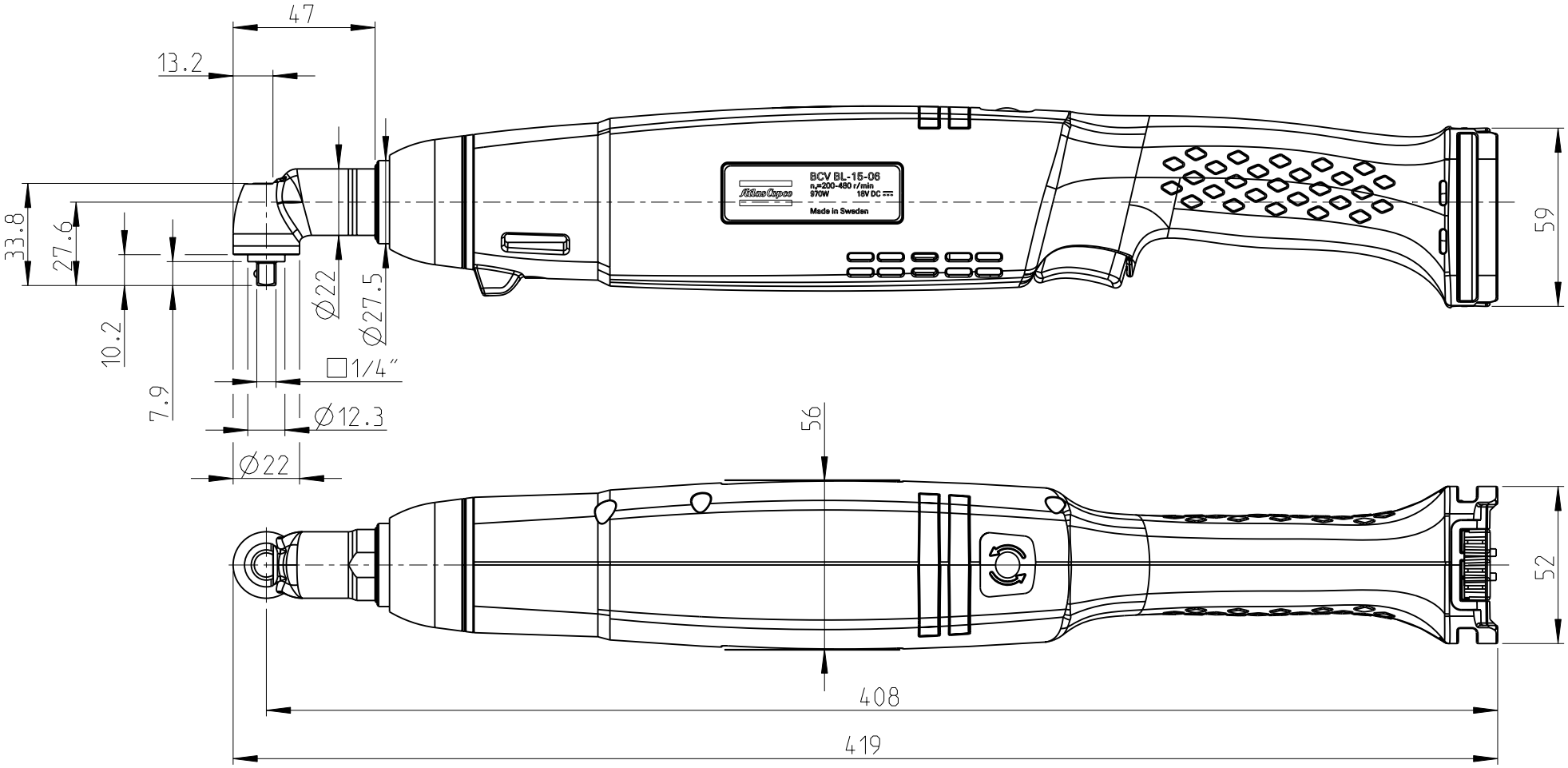

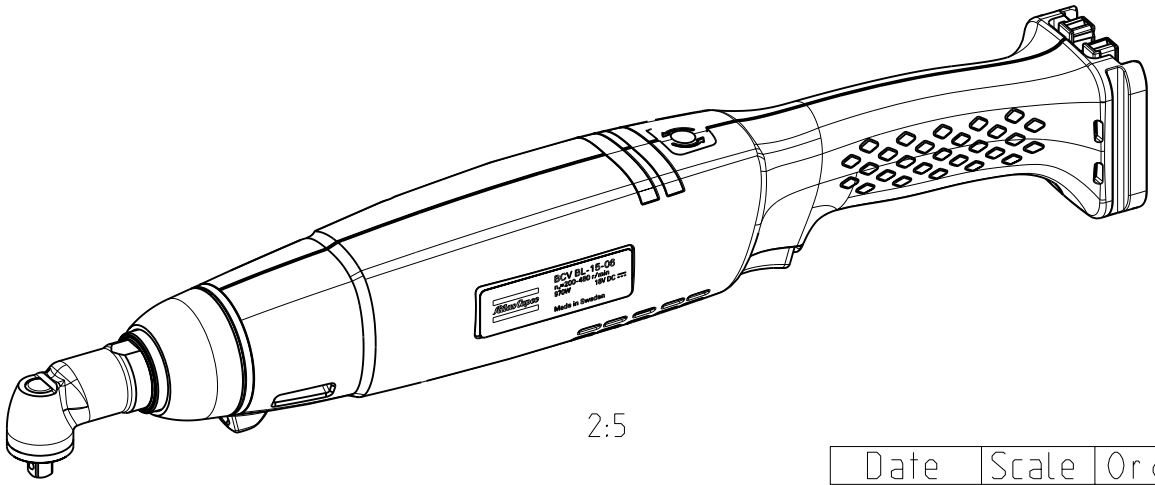

2:5

Atlas Copco

Date	Scale	Ordering No.	Model
	1:2	8431 1275 15	BCV BL-15-06