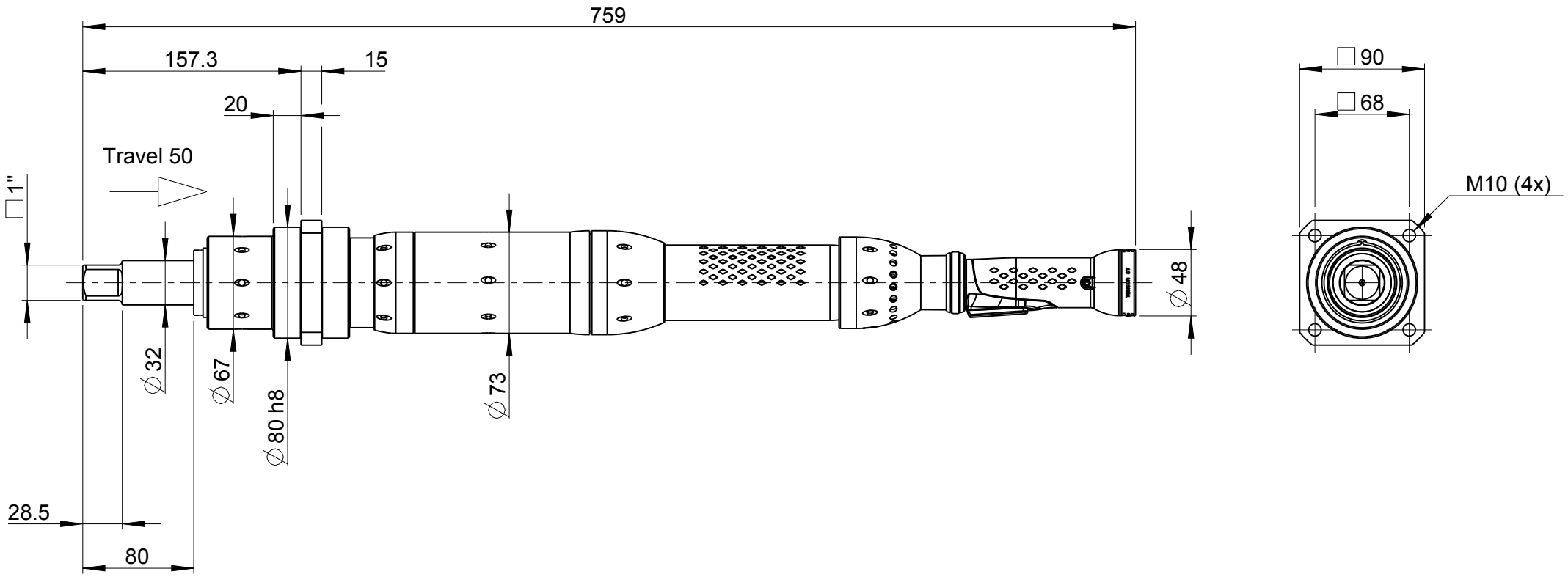

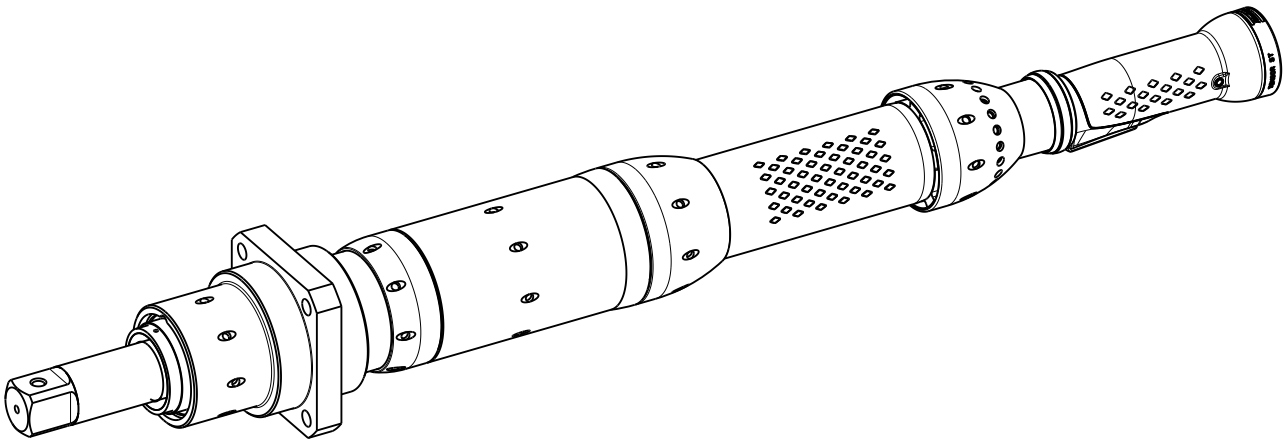

Atlas Copco

Date	Scale	Ordering No.	Model
2016-08-30	1:4	8433 2185 89	ETDST101-1000-25-T50F