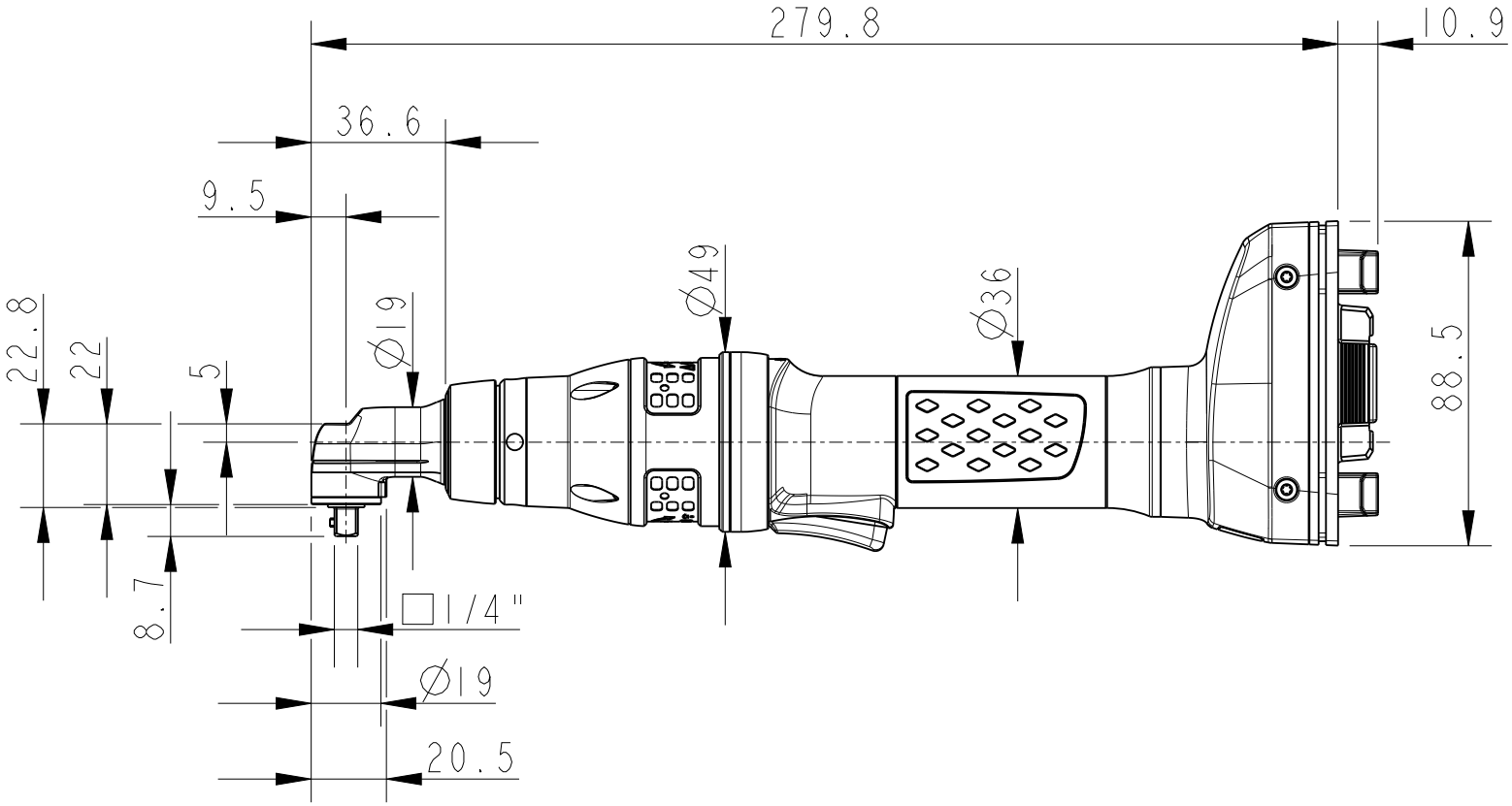

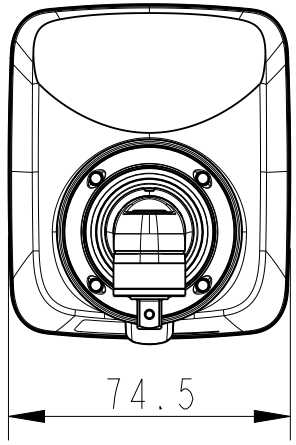

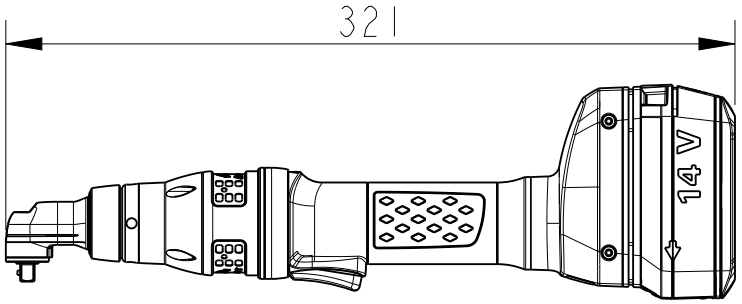

14V Battery

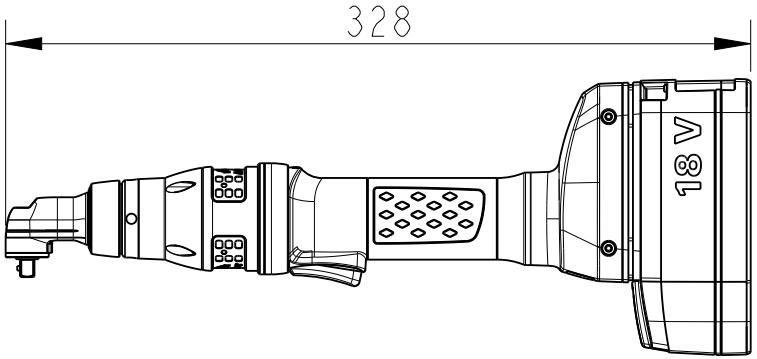

18V Battery

Atlas Copco

Date	Scale	Ordering No.	Model
2021-07-12	0.500	8436 0022 08	ICB-A21-07-06-L-H