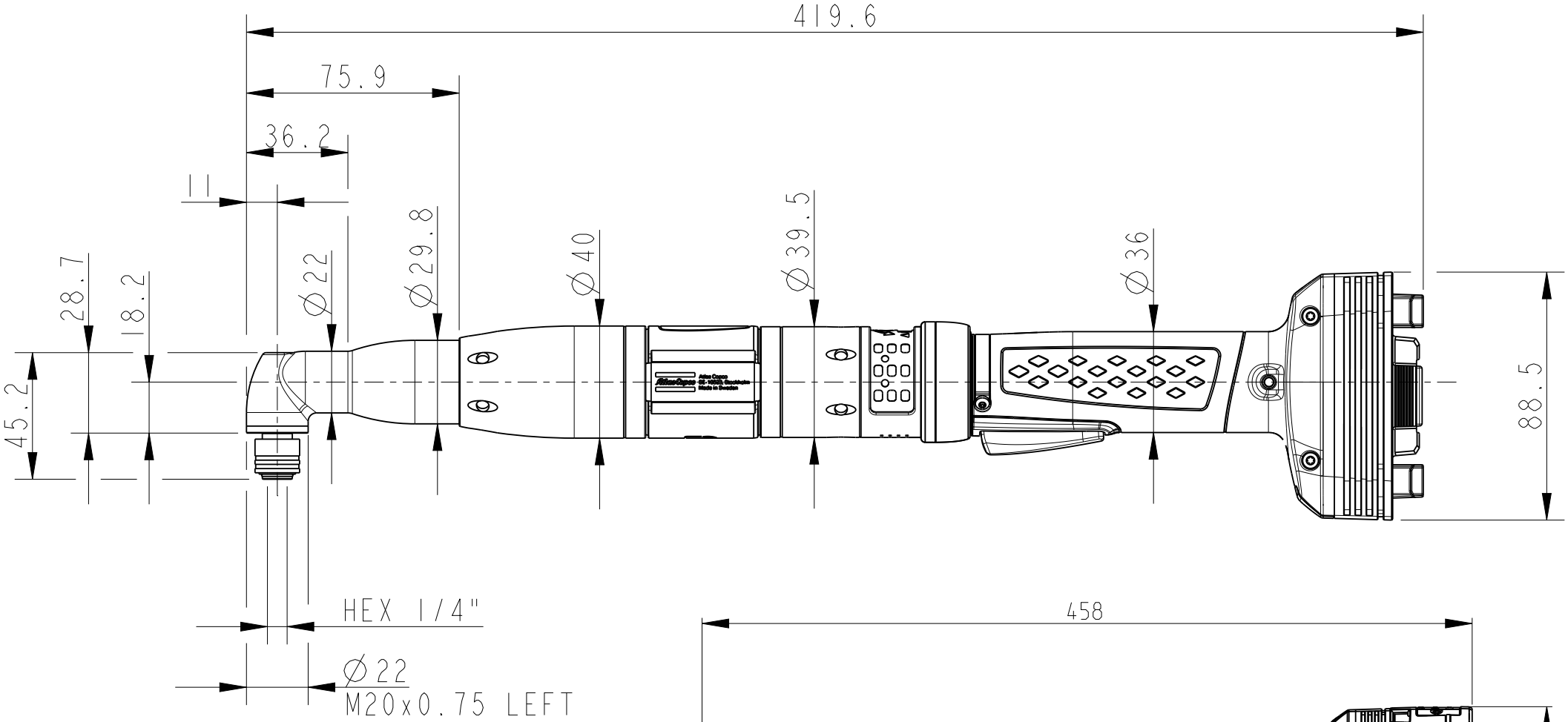

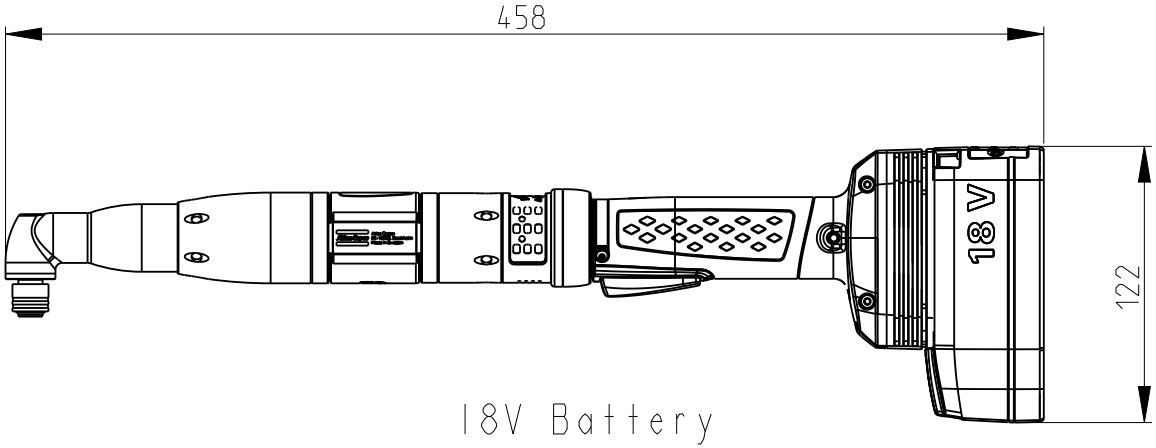

18V Battery

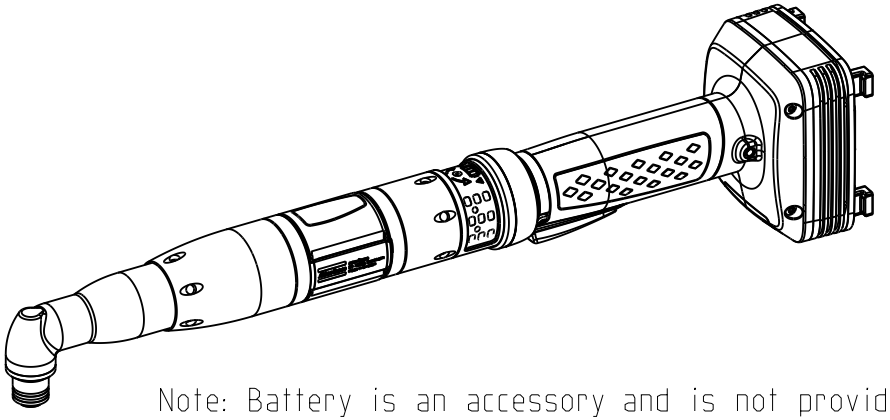

Note: Battery is an accessory and is not provided with the tool.

Date	Scale	Ordering No.	Model
2022-11-10	0.500	8436 0030 06	ITB-A31-05-106