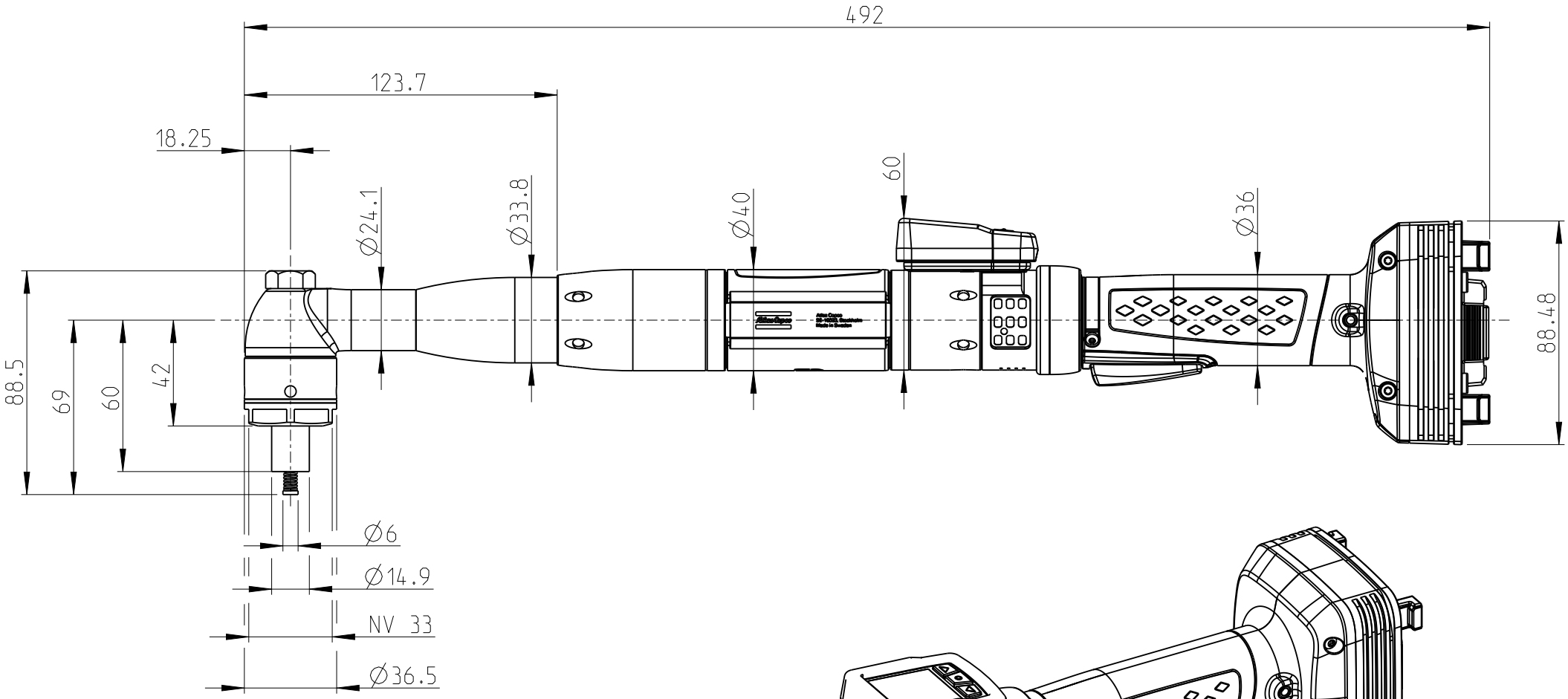

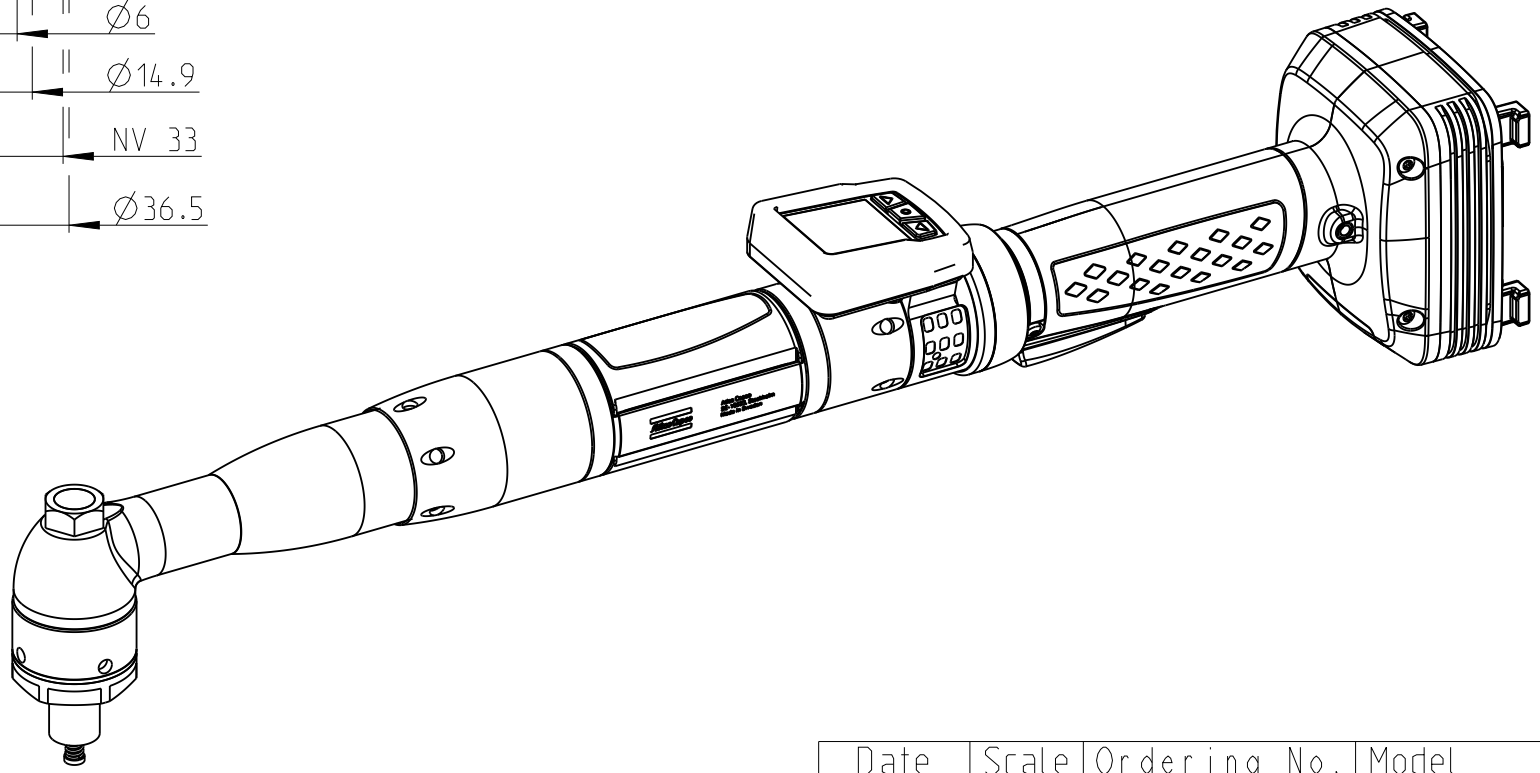

Atlas Copco

Date	Scale	Ordering No.	Model
2022-01-10	0.450	8436 0061 52	ITB-A61-50-HAD-HMI