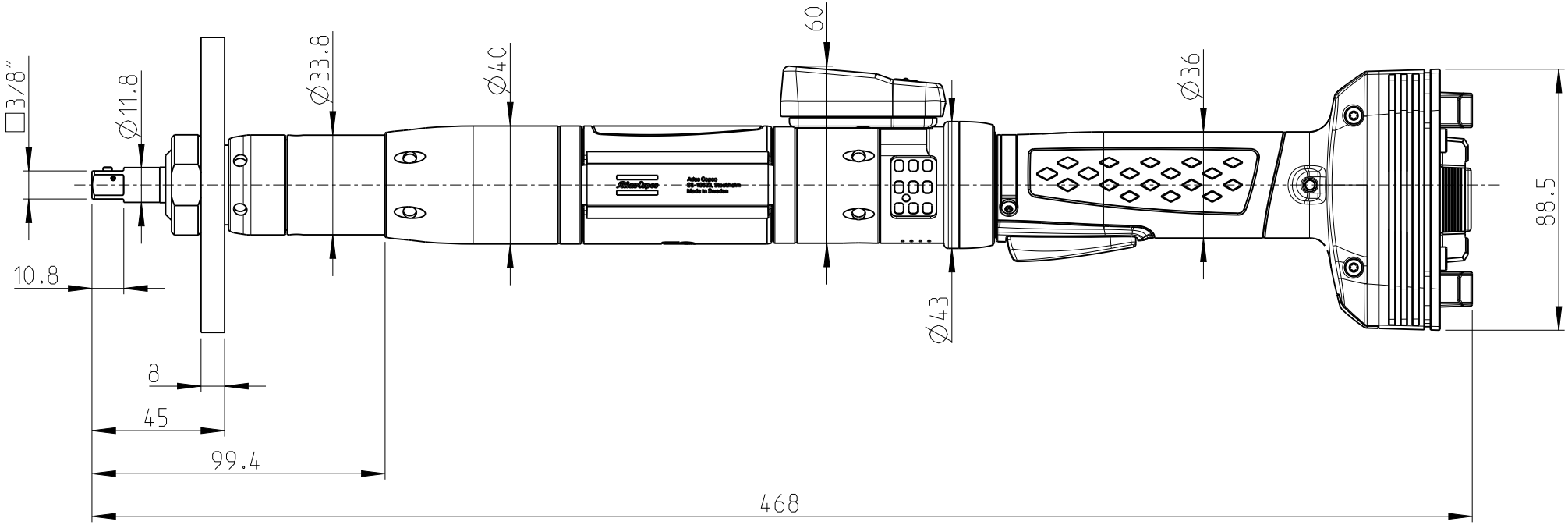

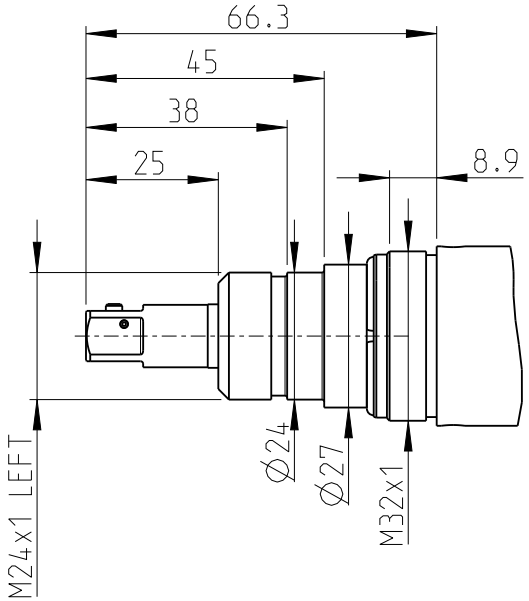

Bracket and Nut removed

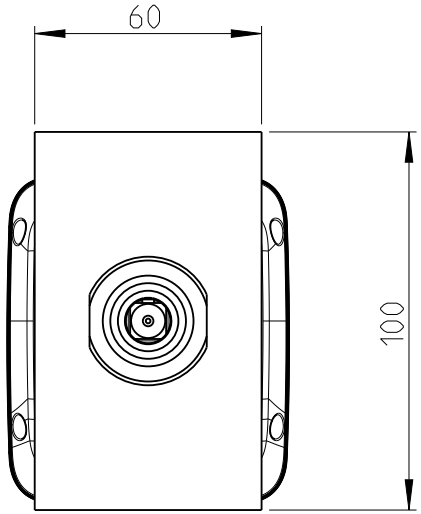

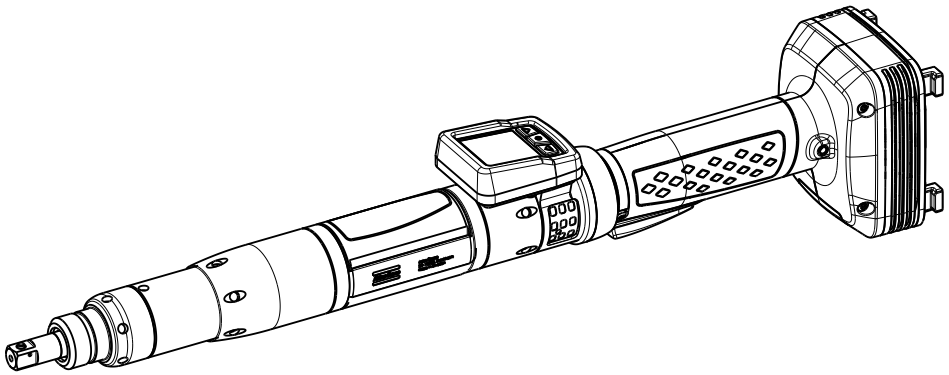

Atlas Copco

Date	Scale	Ordering No.	Model
2024-02-14	0.500	8436 0162 30	ITB-S61-30-10-HMI