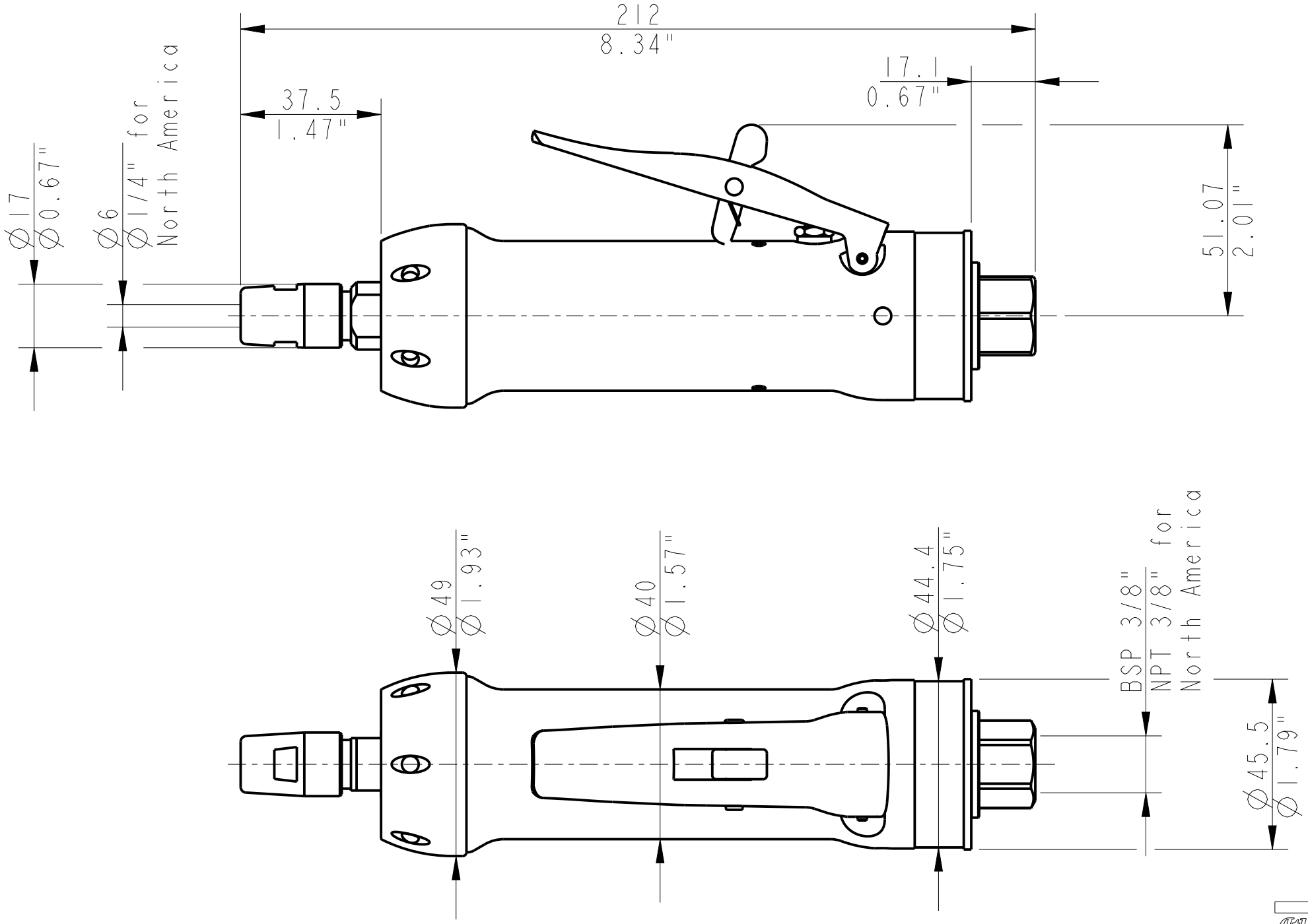

Atlas Copco

Date	Scale	Ordering No.	Model
24-12-2018	0.750	8423 0127 23	LSF29 S120-HD