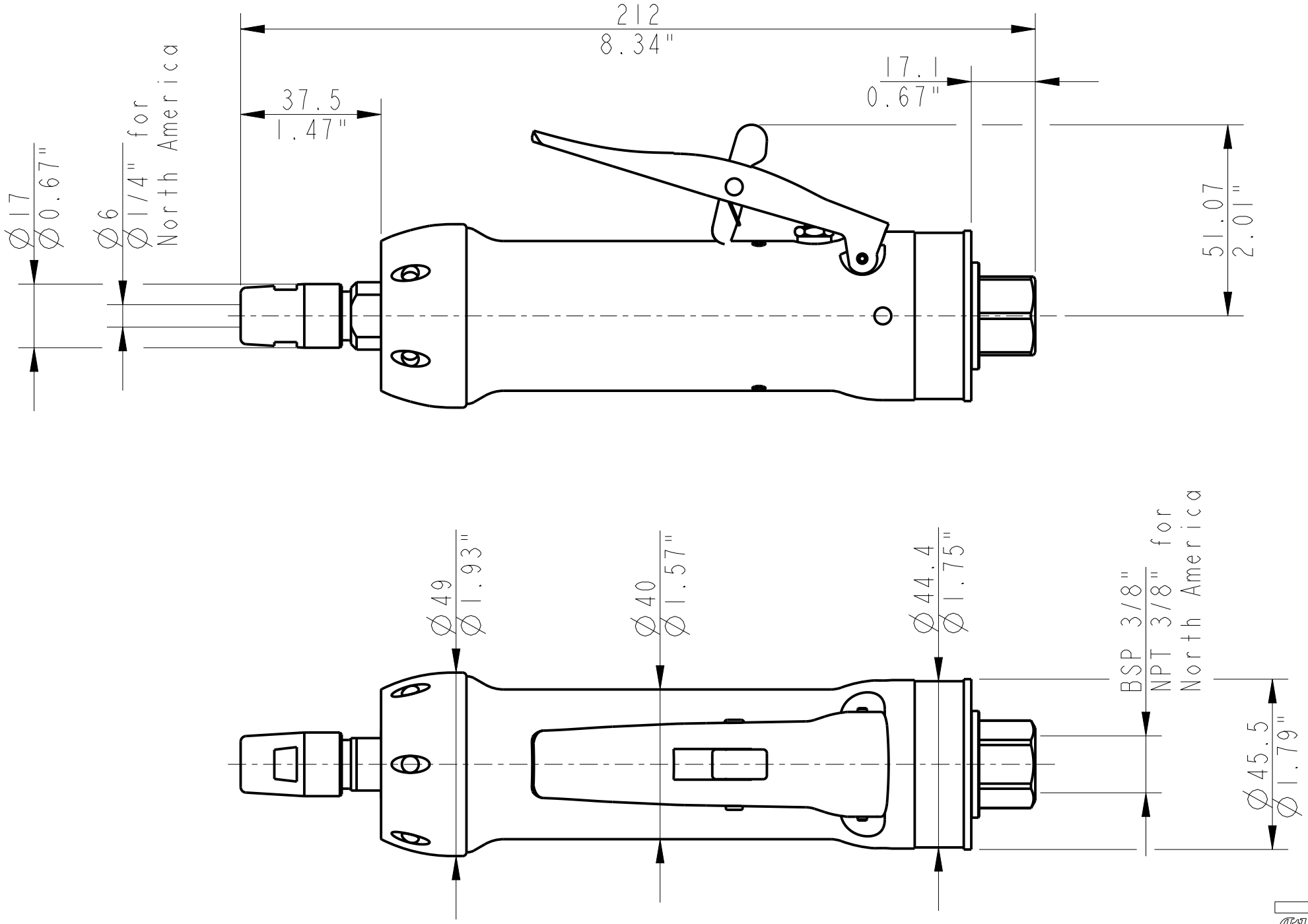

Atlas Copco

Date	Scale	Ordering No.	Model
24-12-2018	0.750	8423 0127 27	LSF29 S250-HD