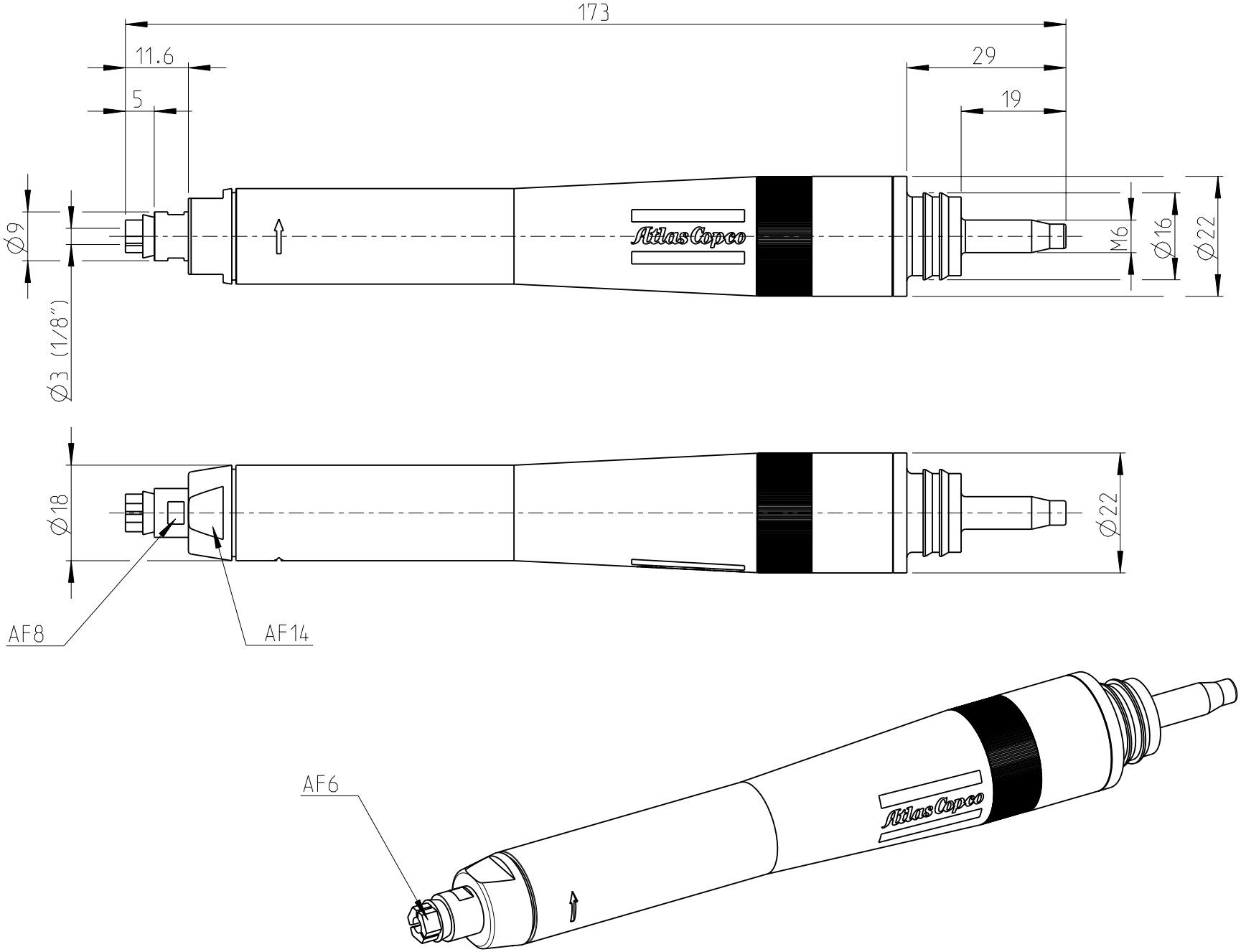

Atlas Copco

Date	Scale	Ordering No.	Model
	1:1	8423 1222 03	LSF 07 S850