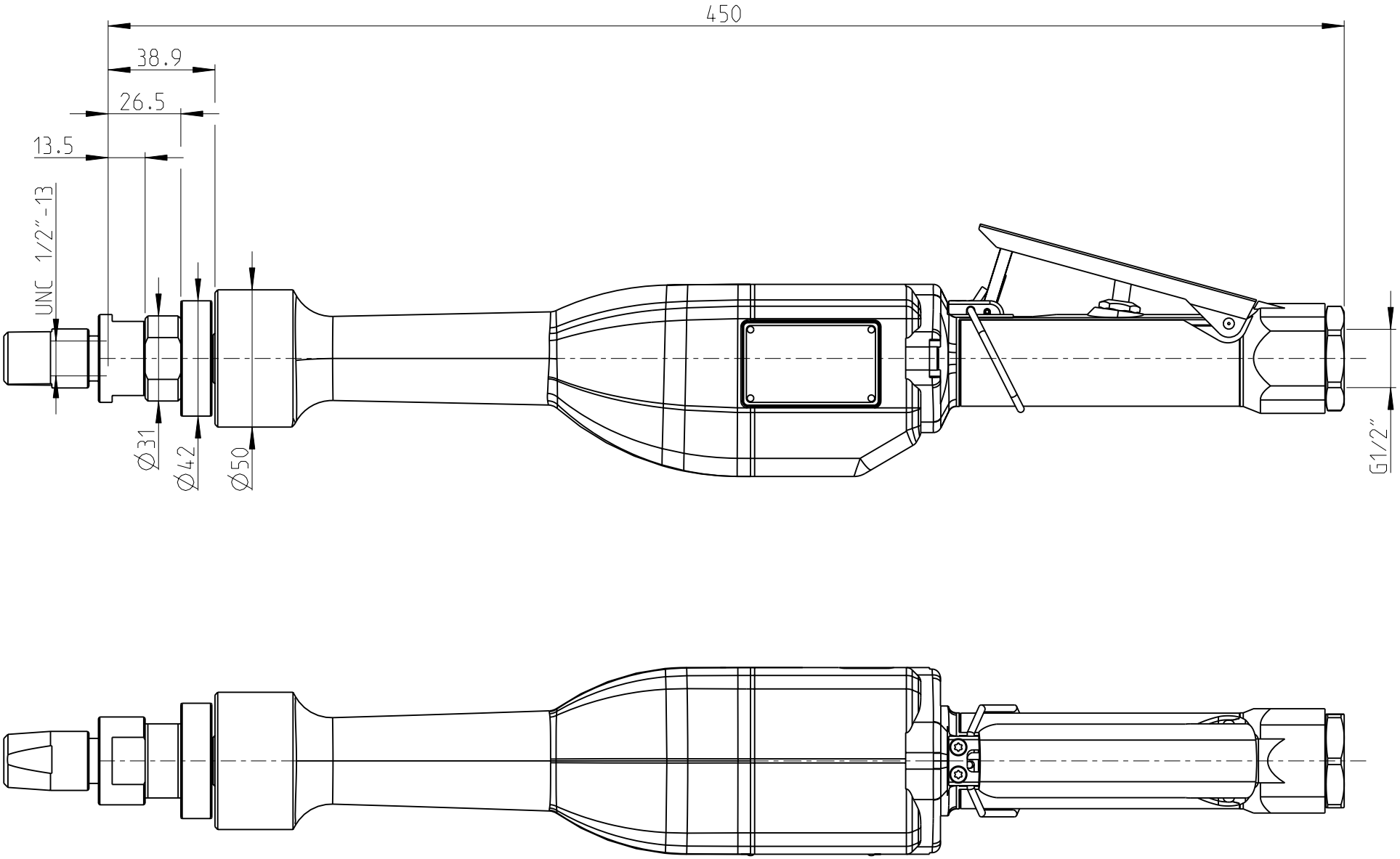

Atlas Copco

Date	Scale	Ordering No.	Model
111020	1:2	8423 1430 03	LSR48 S090-CW