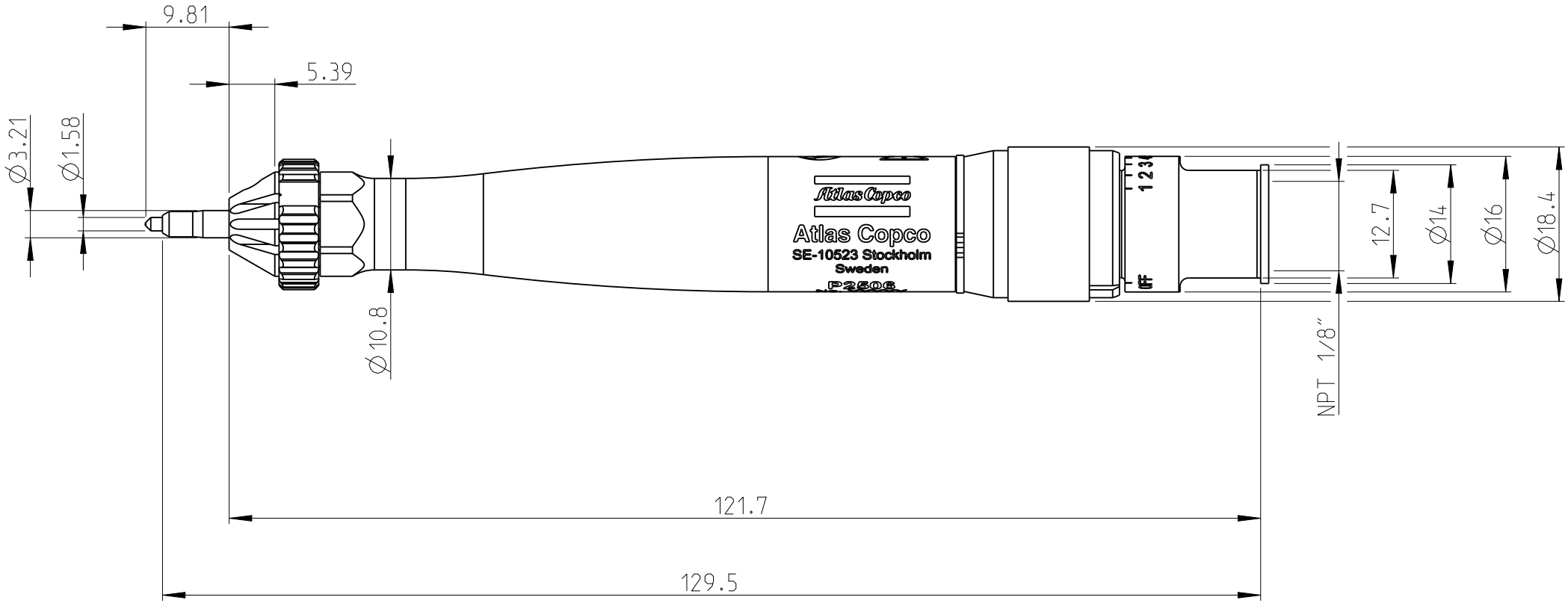

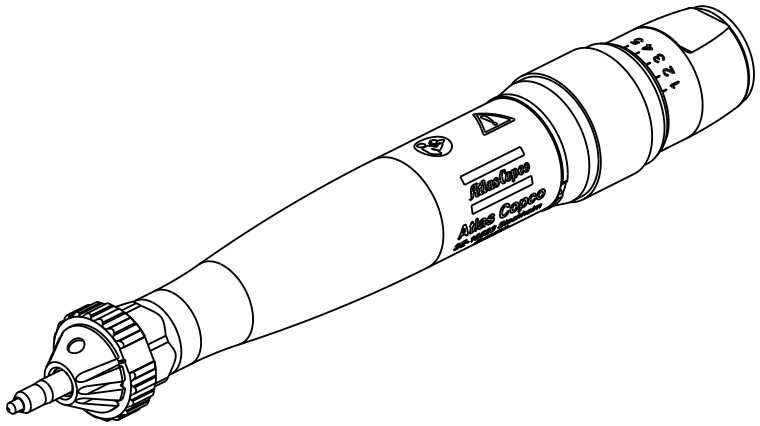

Atlas Copco

Date	Scale	Ordering No.	Model
2022-06-10	1.500	8425 0102 90	-