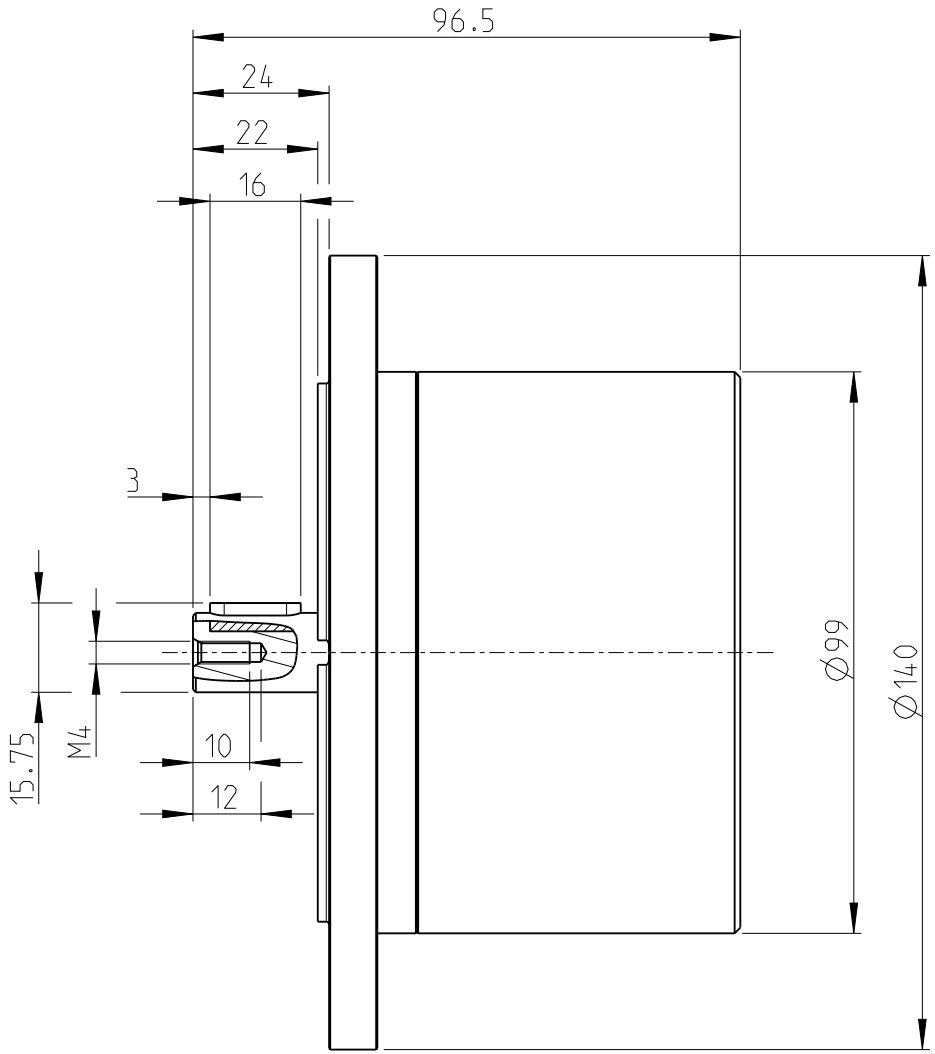

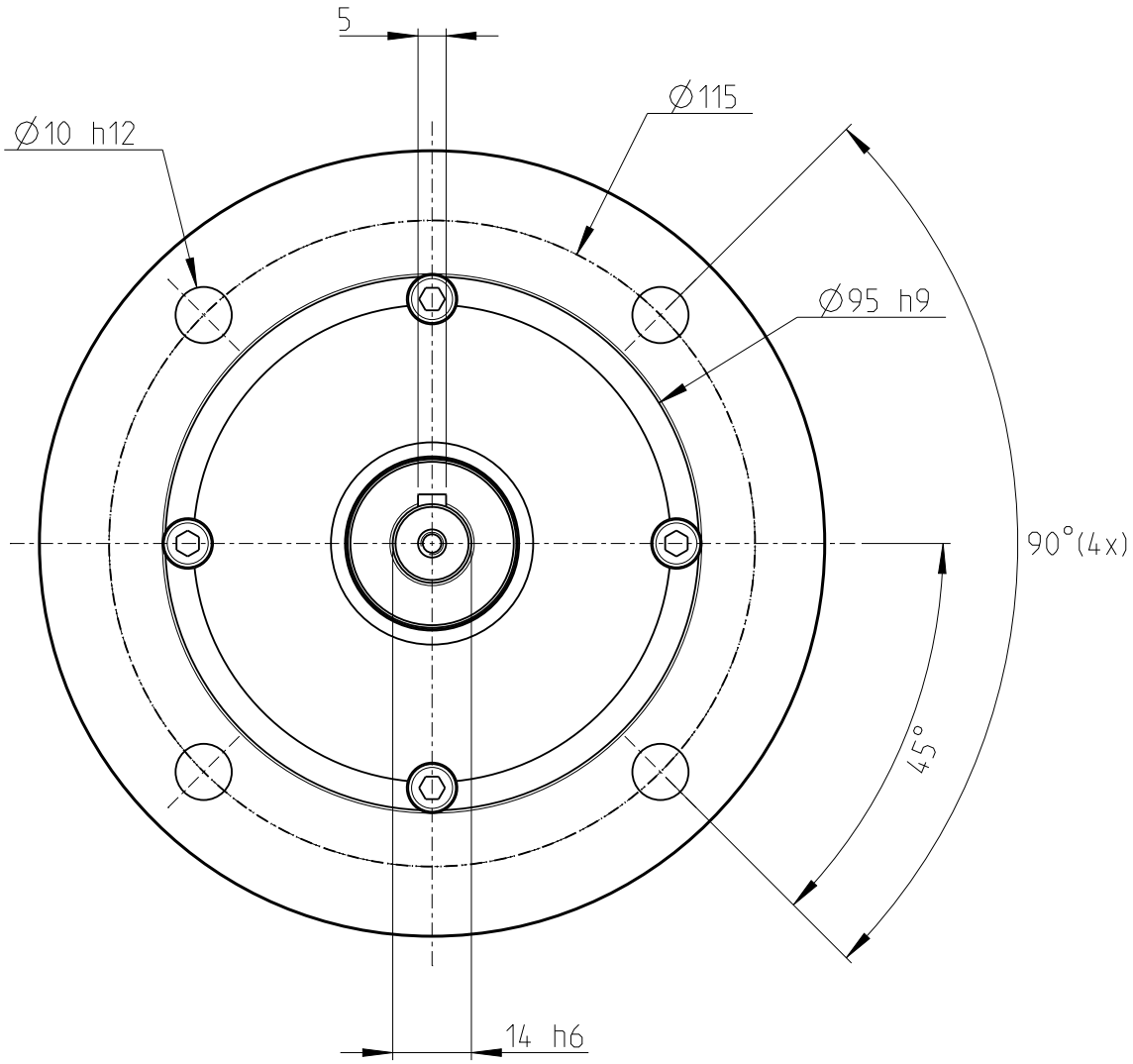

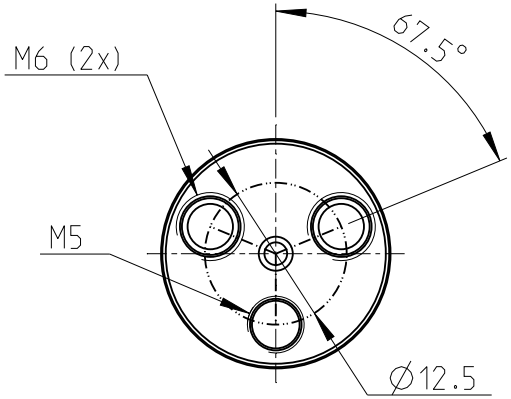

Atlas Copco

Date	Scale	Ordering No.	Model
2024-07-05	0.750	8411 4151 11	PZB15-RL-AR500-20