ASSEM	Status	Rev.ter
4027045400	Released	0.4
Drawing	Status	Rev.ter
4027045400		0.4

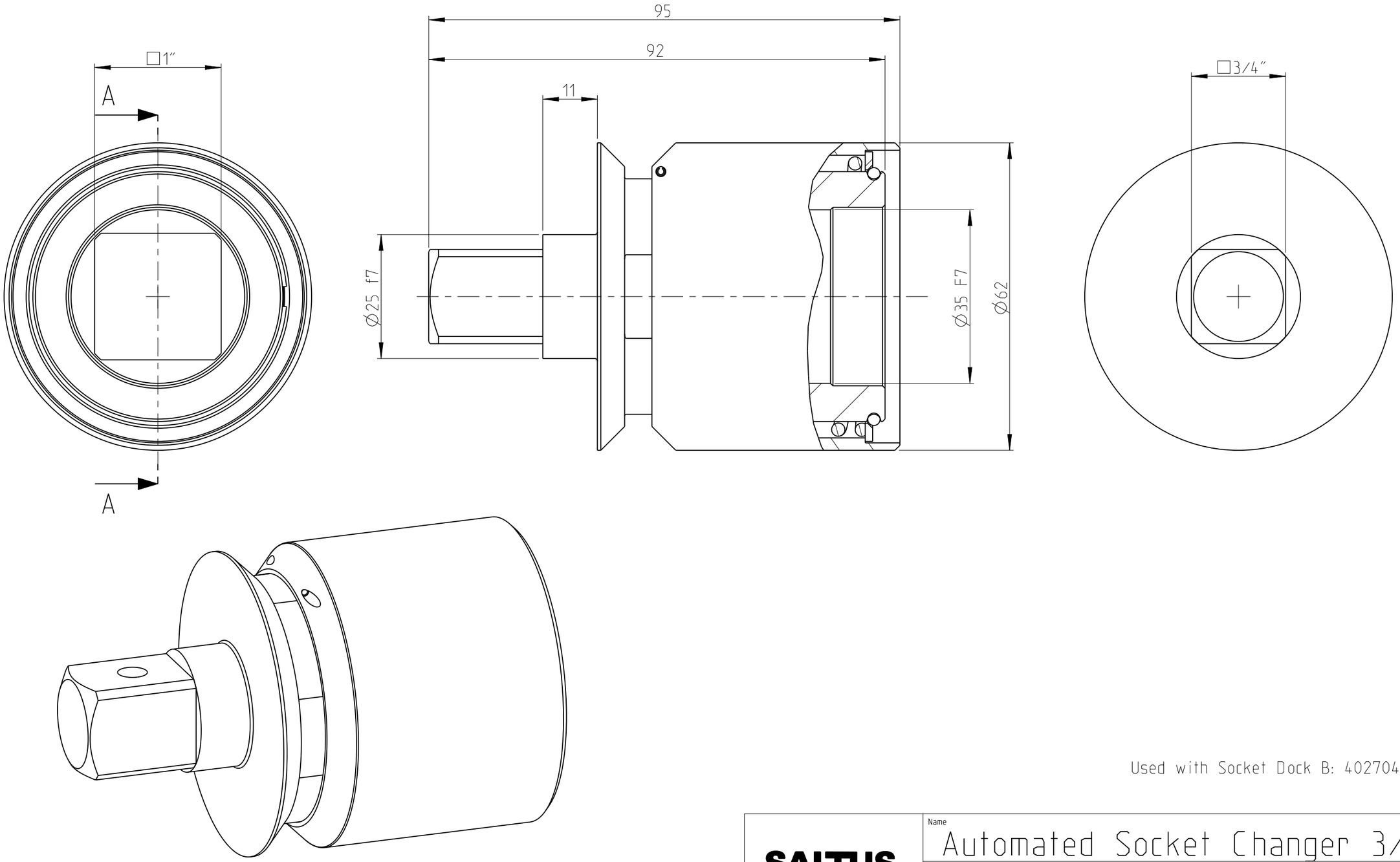

Used with Socket Dock B: 4027045250

SALTUS

Name
Automated Socket Changer 3/4″

Designation
4027 0454 00

proprietary document. Not to be used in any whay witout our concent.